DORIN	M/COMPRESSORE M/COMPRESSORS M/COMPRESSEURS MOTORKOMPRESS.	K1500CS	10/05/1999 N° EM0277	REV. 02

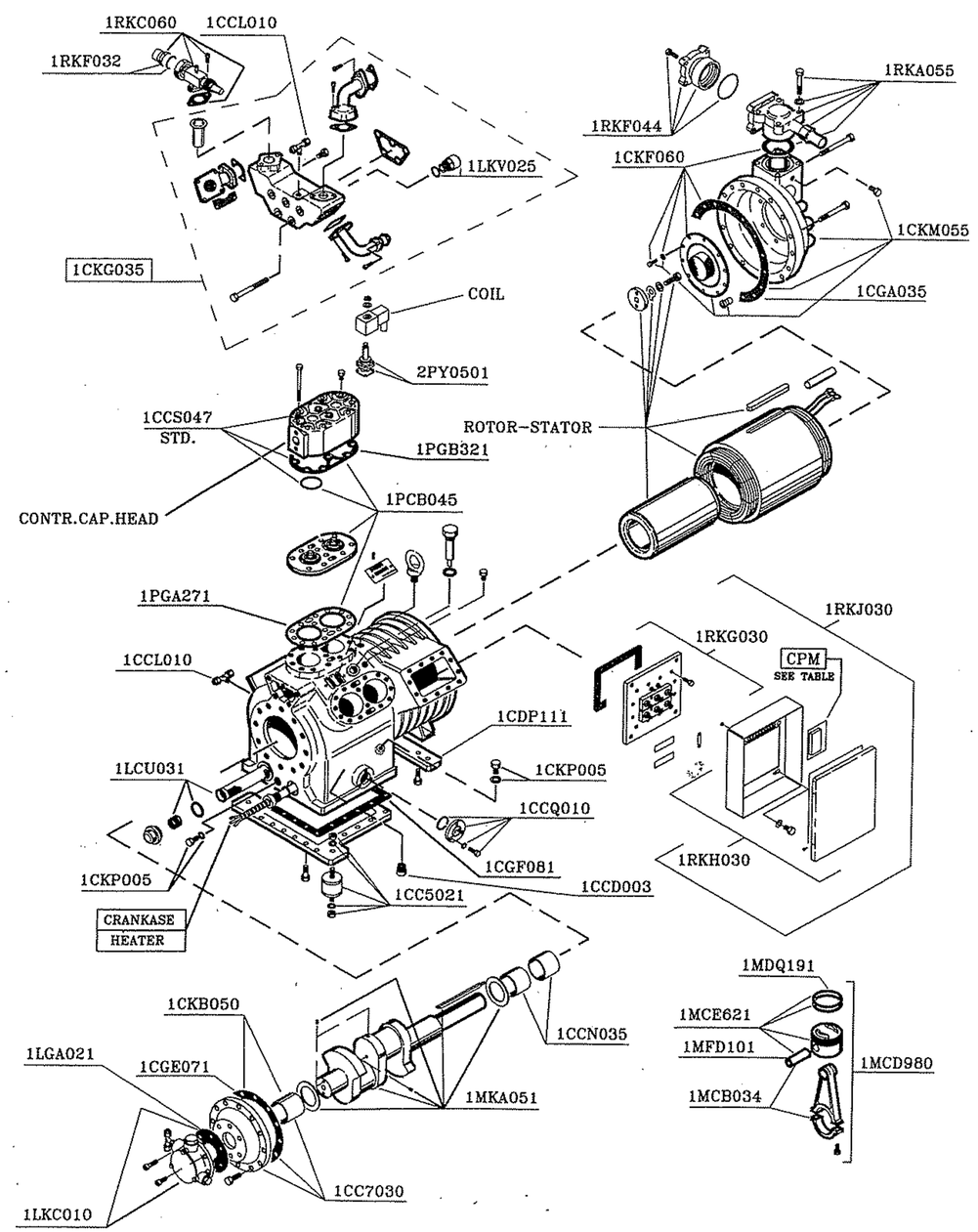

ACCESSORI – ACCESSORIES – ACCESSOIRES – ZUBEHORTEILE

LIQUID INJECTION DEVICE D.T.C.	
COMPLETE SET	1LCN005
VALVE	1GCM010
ELECTRONIC MODULE	2CE3010
TEMP. SENSOR	2CE1040

GASKET SET	1CCM090
AUXILIARI HEAD FAN	1ACS745
D.P.S. SENSOR	2CG1030

CPM	
VOLT	CODE
220	2CC1140
110	2CC1140
24	2CC2140

CRANKASE HEATER	
VOLT	CODE
220	2EG1090
110	2EG1520
24	2EG1080

SUPPLY	ROTOR/STATOR
400/3/50 PWS	1RKM040
220/3/50 PWS	1RKN020
380/3/60 PWS	1RKM043

CONTR.CAP.HEAD	
COIL SUP.	CODE
220	1LCP012
110	1LCP026
24	1LCP021

COIL	
VOLT	CODE
220	2P21010
110	2P21020
24	2P21030
24cc.	2P21040

DEMO

DORIN	M/COMPRESSORE M/COMPRESSORS M/COMPRESSEURS MOTORKOMPRESS.	K1500CS	10/05/99 N° EM0277	REV. 02

Code	Qty	Descrizione	Description	Désignation	Benennung	Mass Kg.
1CC5021	1	Kit Sospensioni compl.	Vibration damper Kit complete	Amortisseur de vibr. compl	Dampfungselement kom.	
1CC7030	1	Mozzo pompa	Oil pump hub	Chapeau a palier compl.	Lagerdeckel kompl.	
1CCD003	1	Valv. rit. olio	Oil check valve	Clapet ret huile	Öldruckschlagven	
1CCL010	1	Presa manometrica TEE 1/4 SAE	Pressure conn. TEE 1/4 SAE	Raccord 1/4 SAE TEE	Anschluss 1/4SAE TEE	
1CCL010	1	Presa manometrica TEE 1/4 SAE	Pressure conn. TEE 1/4 SAE	Raccord 1/4 SAE TEE	Anschluss 1/4SAE TEE	
1CCN035	1	Bronzina centrale	Main Bearing	Coussinet (carter)	Lagerbuchse	
1CCQ010	1	Spia olio completa	Oil sight glass	Voyant du huile	Schauglas	
1CCS047	3	Testa ad aria completa	Air-cooled head	Culasse à air conpl.	Zylinderkopf luft. Kompl.	
1CDP111	1	Staffa lato motore	Crankase support	Pied	Fuss	
1CGA035	1	Guarn. coperchio motore	Motor cover gasket	Joint	Dichtung	
1CGE071	1	Guarnizione mozzo pompa	Hub gasket	Joint, carter/chapeau	Dichtung,Geh./lager.	
1CGF081	1	Guarnizione fondo carter	Cranckase bottom gasket	Joint, fond du carter	Dichtung,Geh./Geh.boden	
1CKB050	1	Bronzina mozzo pompa	Hub Bearing	Coussinet	Lagerbuchse	
1CKF060	1	Filtro di aspirazione	Suction filter and gasket	Filtre d'aspiration	Sauggasfilter	
1CKG035	1	Collettore di mandata compl.	Discharge manifold compl.	Collecteur du refoulement	Schauglaszwinge	
1CKM055	1	Coperchio motore	Electr.motor cover	Couver (cotè motor)	Motordeckel	
1CKP005	1	Tappi Scarica/Carica olio	Screws for oil service	Bouchon pour huile	Schraube	
1CKP005	1	Tappi Scarica/Carica olio	Screws for oil service	Bouchon pour huile	Schraube	
1LCU031	1	Filtro olio compl.	Compl. oil strainer	Filtre huile	Olfilter	
1LGA021	1	Guarnizione pompa olio	Oil pump gasket	Joint, pompe huile	Dichtung	
1LKC010	1	Pompa olio compl.	Oil pump compl.	Pompe huile	Olpumpe kompl.	
1LKV025	2	Valvola sicurezza compl.	Relief valve compl.	Valve de securitè compl.	Sichermeitsven	
1MCB034	6	Biella completa	Complete Connecting rod	Bielle	Pleul kompl.	
1MCD980	6	Kit Biella-Pistone compl.	Conn. rod/ piston compl.	Bielle/Piston compl.	Pleul/Kolben	
1MCE621	6	Pistone completo	Piston complete	Piston compl.	Kolben kompl.	
1MDQ191	12	Segmenti	Rings	Segment étanchèité	Rechteckring	
1MFD101	6	Spinotto	Piston pin	Axe du piston	Bolzenpleuel	
1MKA051	1	Albero completo	Complete Shaft	Vilebbrequin compl.	Kurbelwelle einsch.	
1PCB045	3	Piastra valvole completa	Complete valve plate	Plaque à clapets compl.	Ventilplatte kompl.	
1PGA271	3	Guarnizione P.Valvole-Carter	Valve plate-Carter gasket	Joint,Corps/Plaque a cl.	Dichtung,Geh./Ventilpl.	
1PGB321	3	Guarnizione Testa-P.Valvole	Air head-Valve plate gasket	Joint,Culasse/Plaque cl.	Dichtung, Z.kopf/Ventilpl.	
1RKA055	1	Rubinetto di aspir. D42S	Suction service valve D42S	Vanne d'aspiration D42S	Saugabsperrventil D42S.	
1RKC060	1	Rubinetto di mandata.D28S	Discharge service valve D28S	Vanne de refoul. D28S	Druckabsperrventil D28S	
1RKF032	1	Raccordo estremità rub. scarico	Disch. Pipe conn.	Raccord de Tube Ref.	Rohranschluss	
1RKF044	1	Codolo aspirazione	Suct. Pipe conn.	Raccord de Tube Asp.	Rohranschluss	
1RKG030	1	Piastra attacchi elettrici compl.	Electr.Terminals plate	Plaque à bornes compl.	Stromdurch.platte kompl.	
1RKH030	1	Scatola attacchi elettrici	Complete electrical terminal box	Boite à bornes compl.	Anschl. kompl.	
1RKJ030	1	Scatola attacchi elettrici compl.	Complete electrical terminal box	Boite à bornes compl.	Anschl. kompl.	
1RKM040	1	Roto-statore 400/3/50 PWS	Stator-rotor 400/3/50 PWS	Stator-rotor 400/3/50 PWS	Stator-rotor 400/3/50 PWS	
1RKM043	(1)	Roto-statore 380/3/60 PWS	Stator-rotor 380/3/60 PWS	Stator-rotor 380/3/60 PWS	Stator-rotor 380/3/60 PWS	
1RKN020	(1)	Roto-statore 220/3/50 PWS	Stator-rotor 220/3/50 PWS	Stator-rotor 220/3/50 PWS	Stator-rotor 220/3/50 PWS	
2CC1140	1	Scheda elettr. C.P.M. 110-220 V	Electr. module C.P.M. 110-220 V	Module CPM 110-220v.	Motorschutz. CPM 110-220v.	
			Accessori / Accessories / Accessoires / Zubehorteile			
1ACS745	1	Ventilatore ausiliario	Auxiliary head fan	Ventilateur Add	Zusatzlufter	
1CCM090	1	Serie completa guamizioni	Complete gasket set	Jeu de joints	Dichtungssatz	
2EG1090	1	Resistenza carter 220 Volt	Cranckase heater 220Volt	Résist. du carter 220V	Olsumpfheizung 220Volt	
2EG1520	1	Resistenza carter 110 Volt	Cranckase heater 110Volt	Résist. du carter 110V	Olsumpfheizung 110Volt	
2EG1080	1	Resistenza carter 24 Volt	Cranckase heater 24Volt	Résist. du carter 24V	Olsumpfheizung 24Volt	
2CG1030	1	Sensore D.P.S.	D.P.S. Oil sensor	Detecteur DPS	Sensor DPS	
1LCN005	1	Kit iniezione di liq. D.T.C. compl.	Compl. liq. inj. device D.T.C.	Kit D.T.C. compl.	D.T.C. Bausatz	
1GCM010	1	Valvola di iniezione liquido	Solenoid valve for D.T.C. system	Disp. d'inj. D.T.C.	Magnet-Expansionv. D.T.C.	
2CE1040	1	Sonda di temperatura per D.T.C.	Temp. sensor for D.T.C.	Sonde de temp. D.T.C.	Temperat. D.T.C.	
2CE3010	1	Scheda elettronica per D.T.C.	Electronic module for D.T.C.	D.T.C. Module	D.T.C. Modul	
1LCP012	1	Testa parzial. 220Volt	Controlled capacity head 220V.	Reduction de Puiss. 220v.	Leistungsregelung 220v.	
1LCP026	1	Testa parzial. 110Volt	Controlled capacity head 110V.	Reduction de Puiss. 110v.	Leistungsregelung 110v.	
1LCP021	1	Testa parzial. 24Volt	Controlled capacity head 24V.	Reduction de Puiss. 24v.	Leistungsregelung 24v.	
2P21010	1	Bobina per valvola parz. 220Volt	Coil for solenoid valve 220Volt	Bobine d'electr. 220v.	Magnetspule 220v.	
2P21020	1	Bobina per valvola parz. 110Volt	Coil for solenoid valve 110Volt	Bobine d'electr. 110v.	Magnetspule 110v.	
2P21030	1	Bobina per valvola parz. 24Volt	Coil for solenoid valve 24Volt	Bobine d'electr. 24v.	Magnetspule 24v.	
2P21040	1	Bobina per valv. parz. 24Volt cc	Coil for solenoid valve 24Volt cc	Bobine d'electr. 24v. cc	Magnetspule 24v. cc	
2PY0501	1	Valvola di parzializzazione	Solenoid valve	Vanne regulatrice	Leistungsregelventil	
2CC1140	1	Scheda elettr. C.P.M. 110-220 V	Electr. module C.P.M. 110-220 V	Module CPM 110-220v.	Motorschutz. CPM 110-220v.	
2CC2140	1	Scheda elettr. C.P.M. 24 V	Electr. module C.P.M. 24 V	Module CPM 24v.	Motorschutz. CPM 24v.	

DORIN	M/COMPRESSORE M/COMPRESSORS M/COMPRESSEURS MOTORKOMPRESS.	K2000CC	10/05/1999 N° EM0278	REV. 02

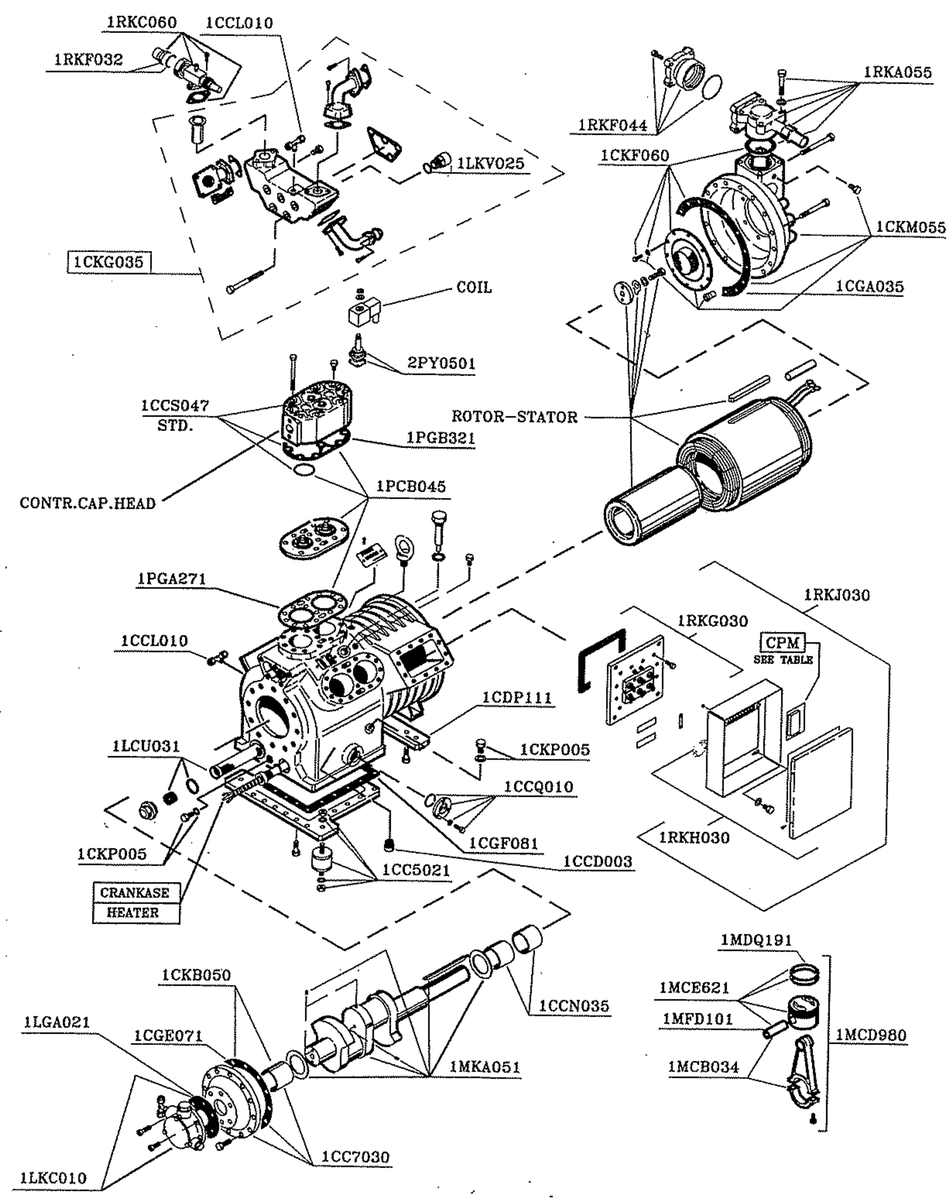

ACCESSORI – ACCESSORIES – ACCESSOIRES – ZUBEHORTEILE

LIQUID INJECTION DEVICE D.T.C.	
COMPLETE SET	1LCN005
VALVE	1GCM010
ELECTRONIC MODULE	2CE3010
TEMP. SENSOR	2CE1040

GASKET SET	1CCM090
AUXILIARI HEAD FAN	1ACS745
D.P.S. SENSOR	2CG1030

CPM	
VOLT	CODE
220	2CC1140
110	2CC1140
24	2CC2140

CRANKASE HEATER	
VOLT	CODE
220	2EG1090
110	2EG1520
24	2EG1080

SUPPLY	ROTOR/STATOR
400/3/50 PWS	1RKM040
220/3/50 PWS	1RKN020
380/3/60 PWS	1RKM043

CONTR.CAP.HEAD	
COIL SUP.	CODE
220	1LCP012
110	1LCP026
24	1LCP021

COIL	
VOLT	CODE
220	2P21010
110	2P21020
24	2P21030
24cc.	2P21040

DEMO

DORIN	M/COMPRESSORE M/COMPRESSORS M/COMPRESSEURS MOTORKOMPRESS.	K2000CC	10/05/99 N° EM0278	REV. 02

Code	Qty	Descrizione	Description	Désignation	Benennung	Mass Kg.
1CC5021	1	Kit Sospensioni compl.	Vibration damper Kit complete	Amortisseur de vibr. compl	Dampfungselement kom.	
1CC7030	1	Mozzo pompa	Oil pump hub	Chapeau a palier compl.	Lagerdeckel kompl.	
1CCD003	1	Valv. rit. olio	Oil check valve	Clapet ret huile	Öldruckschlagven	
1CCL010	1	Presa manometrica TEE 1/4 SAE	Pressure conn. TEE 1/4 SAE	Raccord 1/4 SAE TEE	Anschluss 1/4SAE TEE	
1CCL010	1	Presa manometrica TEE 1/4 SAE	Pressure conn. TEE 1/4 SAE	Raccord 1/4 SAE TEE	Anschluss 1/4SAE TEE	
1CCN035	1	Bronzina centrale	Main Bearing	Coussinet (carter)	Lagerbuchse	
1CCQ010	1	Spia olio completa	Oil sight glass	Voyant du huile	Schauglas	
1CCS047	3	Testa ad aria completa	Air-cooled head	Culasse à air conpl.	Zylinderkopf luft. Kompl.	
1CDP111	1	Staffa lato motore	Crankase support	Pied	Fuss	
1CGA035	1	Guarn. coperchio motore	Motor cover gasket	Joint	Dichtung	
1CGE071	1	Guarnizione mozzo pompa	Hub gasket	Joint, carter/chapeau	Dichtung,Geh./lager.	
1CGF081	1	Guarnizione fondo carter	Cranckase bottom gasket	Joint, fond du carter	Dichtung,Geh./Geh.boden	
1CKB050	1	Bronzina mozzo pompa	Hub Bearing	Coussinet	Lagerbuchse	
1CKF060	1	Filtro di aspirazione	Suction filter and gasket	Filtre d'aspiration	Sauggasfilter	
1CKG035	1	Collettore di mandata compl.	Discharge manifold compl.	Collecteur du refoulement	Schauglaszwinge	
1CKM055	1	Coperchio motore	Electr.motor cover	Couver (cotè motor)	Motordeckel	
1CKP005	1	Tappi Scarica/Carica olio	Screws for oil service	Bouchon pour huile	Schraube	
1CKP005	1	Tappi Scarica/Carica olio	Screws for oil service	Bouchon pour huile	Schraube	
1LCU031	1	Filtro olio compl.	Compl. oil strainer	Filtre huile	Olfilter	
1LGA021	1	Guarnizione pompa olio	Oil pump gasket	Joint, pompe huile	Dichtung	
1LKC010	1	Pompa olio compl.	Oil pump compl.	Pompe huile	Olpumpe kompl.	
1LKV025	2	Valvola sicurezza compl.	Relief valve compl.	Valve de securitè compl.	Sichermeitsven	
1MCB034	6	Biella completa	Complete Connecting rod	Bielle	Pleul kompl.	
1MCD980	6	Kit Biella-Pistone compl.	Conn. rod/ piston compl.	Bielle/Piston compl.	Pleul/Kolben	
1MCE621	6	Pistone completo	Piston complete	Piston compl.	Kolben kompl.	
1MDQ191	12	Segmenti	Rings	Segment étanchèité	Rechteckring	
1MFD101	6	Spinotto	Piston pin	Axe du piston	Bolzenpleuel	
1MKA051	1	Albero completo	Complete Shaft	Vilebbrequin compl.	Kurbelwelle einsch.	
1PCB045	3	Piastra valvole completa	Complete valve plate	Plaque à clapets compl.	Ventilplatte kompl.	
1PGA271	3	Guarnizione P.Valvole-Carter	Valve plate-Carter gasket	Joint,Corps/Plaque a cl.	Dichtung,Geh./Ventilpl.	
1PGB321	3	Guarnizione Testa-P.Valvole	Air head-Valve plate gasket	Joint,Culasse/Plaque cl.	Dichtung, Z.kopf/Ventilpl.	
1RKA055	1	Rubinetto di aspir. D42S	Suction service valve D42S	Vanne d'aspiration D42S	Saugabsperrventil D42S.	
1RKC060	1	Rubinetto di mandata.D28S	Discharge service valve D28S	Vanne de refoul. D28S	Druckabsperrventil D28S	
1RKF032	1	Raccordo estremità rub. scarico	Disch. Pipe conn.	Raccord de Tube Ref.	Rohranschluss	
1RKF044	1	Codolo aspirazione	Suct. Pipe conn.	Raccord de Tube Asp.	Rohranschluss	
1RKG030	1	Piastra attacchi elettrici compl.	Electr.Terminals plate	Plaque à bornes compl.	Stromdurch.platte kompl.	
1RKH030	1	Scatola attacchi elettrici	Complete electrical terminal box	Boite à bornes compl.	Anschl. kompl.	
1RKJ030	1	Scatola attacchi elettrici compl.	Complete electrical terminal box	Boite à bornes compl.	Anschl. kompl.	
1RKM040	1	Roto-statore 400/3/50 PWS	Stator-rotor 400/3/50 PWS	Stator-rotor 400/3/50 PWS	Stator-rotor 400/3/50 PWS	
1RKM043	(1)	Roto-statore 380/3/60 PWS	Stator-rotor 380/3/60 PWS	Stator-rotor 380/3/60 PWS	Stator-rotor 380/3/60 PWS	
1RKN020	(1)	Roto-statore 220/3/50 PWS	Stator-rotor 220/3/50 PWS	Stator-rotor 220/3/50 PWS	Stator-rotor 220/3/50 PWS	
2CC1140	1	Scheda elettr. C.P.M. 110-220 V	Electr. module C.P.M. 110-220 V	Module CPM 110-220v.	Motorschutz. CPM 110-220v.	
			Accessori / Accessories / Accessoires / Zubehorteile			
1ACS745	1	Ventilatore ausiliario	Auxiliary head fan	Ventilateur Add	Zusatzlufter	
1CCM090	1	Serie completa guarnizioni	Complete gasket set	Jeu de joints	Dichtungssatz	
2EG1090	1	Resistenza carter 220 Volt	Cranckase heater 220Volt	Résist. du carter 220V	Olsumpfheizung 220Volt	
2EG1520	1	Resistenza carter 110 Volt	Cranckase heater 110Volt	Résist. du carter 110V	Olsumpfheizung 110Volt	
2EG1080	1	Resistenza carter 24 Volt	Cranckase heater 24Volt	Résist. du carter 24V	Olsumpfheizung 24Volt	
2CG1030	1	Sensore D.P.S.	D.P.S. Oil sensor	Detecteur DPS	Sensor DPS	
1LCN005	1	Kit iniezione di liq. D.T.C. compl.	Compl. liq. inj. device D.T.C.	Kit D.T.C. compl.	D.T.C. Bausatz	
1GCM010	1	Valvola di iniezione liquido	Solenoid valve for D.T.C. system	Disp. d'inj. D.T.C.	Magnet-Expansionv. D.T.C.	
2CE1040	1	Sonda di temperatura per D.T.C.	Temp. sensor for D.T.C.	Sonde de temp. D.T.C.	Temperat. D.T.C.	
2CE3010	1	Scheda elettronica per D.T.C.	Electronic module for D.T.C.	D.T.C. Module	D.T.C. Modul	
1LCP012	1	Testa parzial. 220Volt	Controlled capacity head 220V.	Reduction de Puiss. 220v.	Leistungsregelung 220v.	
1LCP026	1	Testa parzial. 110Volt	Controlled capacity head 110V.	Reduction de Puiss. 110v.	Leistungsregelung 110v.	
1LCP021	1	Testa parzial. 24Volt	Controlled capacity head 24V.	Reduction de Puiss. 24v.	Leistungsregelung 24v.	
2P21010	1	Bobina per valvola parz. 220Volt	Coil for solenoid valve 220Volt	Bobine d'electr. 220v.	Magnetspule 220v.	
2P21020	1	Bobina per valvola parz. 110Volt	Coil for solenoid valve 110Volt	Bobine d'electr. 110v.	Magnetspule 110v.	
2P21030	1	Bobina per valvola parz. 24Volt	Coil for solenoid valve 24Volt	Bobine d'electr. 24v.	Magnetspule 24v.	
2P21040	1	Bobina per valv. parz. 24Volt cc	Coil for solenoid valve 24Volt cc	Bobine d'electr. 24v. cc	Magnetspule 24v. cc	
2PY0501	1	Valvola di parzializzazione	Solenoid valve	Vanne regulatrice	Leistungsregelventil	
2CC1140	1	Scheda elettr. C.P.M. 110-220 V	Electr. module C.P.M. 110-220 V	Module CPM 110-220v.	Motorschutz. CPM 110-220v.	
2CC2140	1	Scheda elettr. C.P.M. 24 V	Electr. module C.P.M. 24 V	Module CPM 24v.	Motorschutz. CPM 24v.	

DORIN	M/COMPRESSORE M/COMPRESSORS M/COMPRESSEURS MOTORKOMPRESS.	K1500CB	10/05/1999 N° EM0279	REV. 02

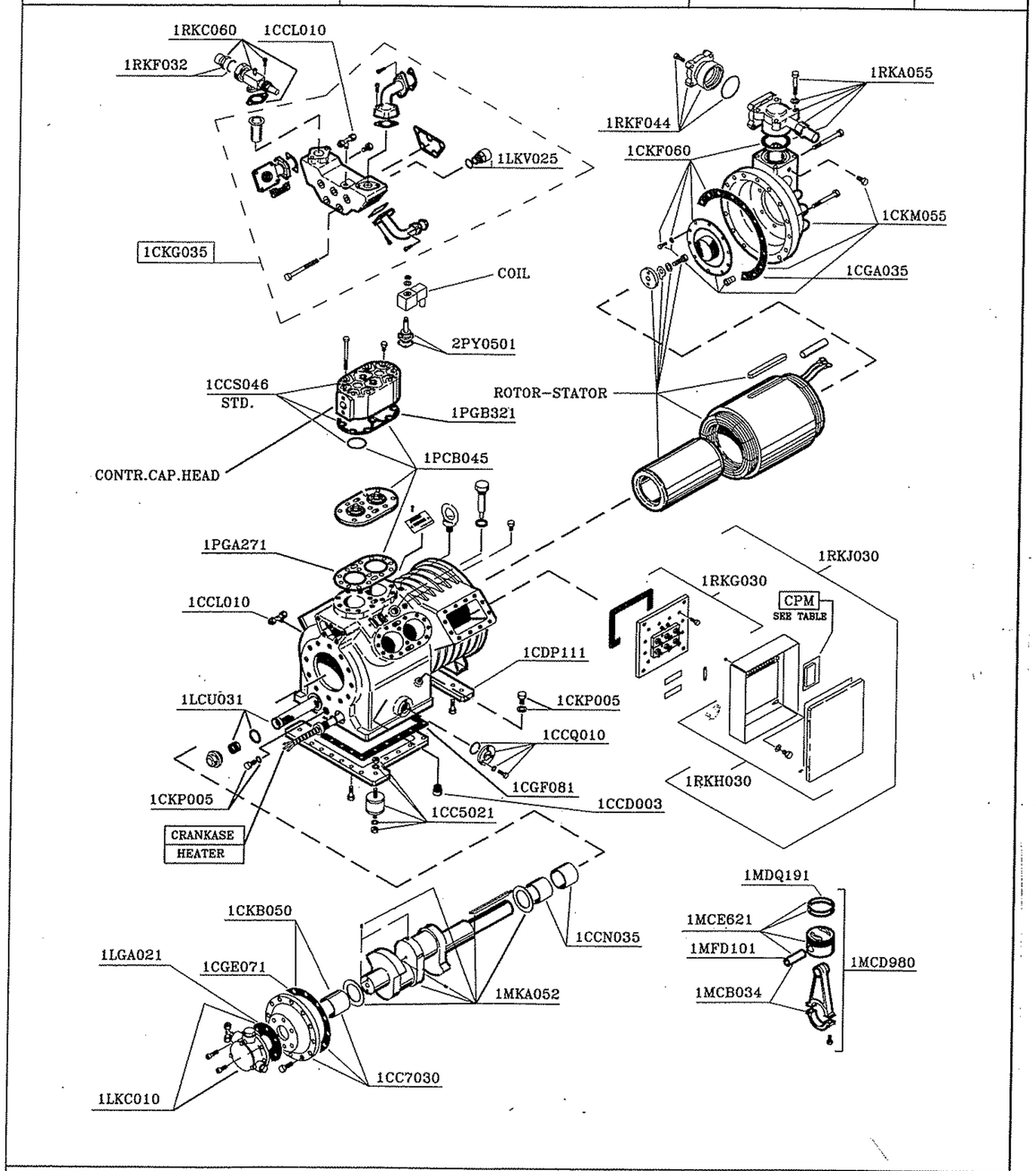

ACCESSORI – ACCESSORIES – ACCESSOIRES – ZUBEHORTEILE

LIQUID INJECTION DEVICE D.T.C.	
COMPLETE SET	1LCN005
VALVE	1GCM010
ELECTRONIC MODULE	2CE3010
TEMP. SENSOR	2CE1040

GASKET SET	1CCM090
AUXILIARI HEAD FAN	1ACS745
D.P.S. SENSOR	2CG1030

CPM	
VOLT	CODE
220	2CC1140
110	2CC1140
24	2CC2140

CRANKASE HEATER	
VOLT	CODE
220	2EG1090
110	2EG1520
24	2EG1080

SUPPLY	ROTOR/STATOR
400/3/50 PWS	1RKM041
220/3/50 PWS	1RKN021
380/3/60 PWS	1RKM044

CONTR.CAP.HEAD	
COIL SUP.	CODE
220	1LCP011
110	1LCP025
24	1LCP020

COIL	
VOLT	CODE
220	2P21010
110	2P21020
24	2P21030
24cc.	2P21040

DEMO

DORIN	M/COMPRESSORE M/COMPRESSORS M/COMPRESSEURS MOTORKOMPRESS.	K1500CB	10/05/99 N° EM0279	REV. 02

Code	Qty	Descrizione	Description	Désignation	Benennung	Mass Kg.
1CC5021	1	Kit Sospensioni compl.	Vibration damper Kit complete	Amortisseur de vibr. compl	Dampfungselement kom.	
1CC7030	1	Mozzo pompa	Oil pump hub	Chapeau a palier compl.	Lagerdeckel kompl.	
1CCD003	1	Valv. rit. olio	Oil check valve	Clapet ret huile	Öldruckschlagven	
1CCL010	1	Presa manometrica TEE 1/4 SAE	Pressure conn. TEE 1/4 SAE	Raccord 1/4 SAE TEE	Anschluss 1/4SAE TEE	
1CCL010	1	Presa manometrica TEE 1/4 SAE	Pressure conn. TEE 1/4 SAE	Raccord 1/4 SAE TEE	Anschluss 1/4SAE TEE	
1CCN035	1	Bronzina centrale	Main Bearing	Coussinet (carter)	Lagerbuchse	
1CCQ010	1	Spia olio completa	Oil sight glass	Voyant du huile	Schauglas	
1CCS046	3	Testa ad aria completa	Air-cooled head	Culasse à air conpl.	Zylinderkopf luft. Kompl.	
1CDP111	1	Staffa lato motore	Crankase support	Pied	Fuss	
1CGA035	1	Guarn. coperchio motore	Motor cover gasket	Joint	Dichtung	
1CGE071	1	Guarnizione mozzo pompa	Hub gasket	Joint, carter/chapeau	Dichtung,Geh./lager.	
1CGF081	1	Guarnizione fondo carter	Cranckase bottom gasket	Joint, fond du carter	Dichtung,Geh./Geh.boden	
1CKB050	1	Bronzina mozzo pompa	Hub Bearing	Coussinet	Lagerbuchse	
1CKF060	1	Filtro di aspirazione	Suction filter and gasket	Filtre d'aspiration	Sauggasfilter	
1CKG035	1	Collettore di mandata compl.	Discharge manifold compl.	Collecteur du refoulement	Schauglaszwinge	
1CKM055	1	Coperchio motore	Electr.motor cover	Couver (cotè motor)	Motordeckel	
1CKP005	1	Tappi Scarica/Carica olio	Screws for oil service	Bouchon pour huile	Schraube	
1CKP005	1	Tappi Scarica/Carica olio	Screws for oil service	Bouchon pour huile	Schraube	
1LCU031	1	Filtro olio compl.	Compl. oil strainer	Filtre huile	Olfilter	
1LGA021	1	Guarnizione pompa olio	Oil pump gasket	Joint, pompe huile	Dichtung	
1LKC010	1	Pompa olio compl.	Oil pump compl.	Pompe huile	Olpumpe kompl.	
1LKV025	2	Valvola sicurezza compl.	Relief valve compl.	Valve de securitè compl.	Sichermeitsven	
1MCB034	6	Biella completa	Complete Connecting rod	Bielle	Pleul kompl.	
1MCD980	6	Kit Biella-Pistone compl.	Conn. rod/ piston compl.	Bielle/Piston compl.	Pleul/Kolben	
1MCE621	6	Pistone completo	Piston complete	Piston compl.	Kolben kompl.	
1MDQ191	12	Segmenti	Rings	Segment étanchèité	Rechteckring	
1MFD101	6	Spinotto	Piston pin	Axe du piston	Bolzenpleuel	
1MKA052	1	Albero completo	Complete Shaft	Vilebbrequin compl.	Kurbelwelle einsch.	
1PCB045	3	Piastra valvole completa	Complete valve plate	Plaque à clapets compl.	Ventilplatte kompl.	
1PGA271	3	Guarnizione P.Valvole-Carter	Valve plate-Carter gasket	Joint,Corps/Plaque a cl.	Dichtung,Geh./Ventilpl.	
1PGB321	3	Guarnizione Testa-P.Valvole	Air head-Valve plate gasket	Joint,Culasse/Plaque cl.	Dichtung, Z.kopf/Ventilpl.	
1RKA055	1	Rubinetto di aspir. D42S	Suction service valve D42S	Vanne d'aspiration D42S	Saugabsperventil D42S.	
1RKC060	1	Rubinetto di mandata.D28S	Discharge service valve D28S	Vanne de refoul. D28S	Druckabsperventil D28S	
1RKF032	1	Raccordo estremità rub. scarico	Disch. Pipe conn.	Raccord de Tube Ref.	Rohranschluss	
1RKF044	1	Codolo aspirazione	Suct. Pipe conn.	Raccord de Tube Asp.	Rohranschluss	
1RKG030	1	Piastra attacchi elettrici compl.	Electr.Terminals plate	Plaque à bornes compl.	Stromdurch.platte kompl.	
1RKH030	1	Scatola attacchi elettrici	Complete electrical terminal box	Boite à bornes compl.	Anschl. kompl.	
1RKJ030	1	Scatola attacchi elettrici compl.	Complete electrical terminal box	Boite à bornes compl.	Anschl. kompl.	
1RKM041	1	Roto-statore 400/3/50 PWS	Stator-rotor 400/3/50 PWS	Stator-rotor 400/3/50 PWS	Stator-rotor 400/3/50 PWS	
1RKM044	(1)	Roto-statore 380/3/60 PWS	Stator-rotor 380/3/60 PWS	Stator-rotor 380/3/60 PWS	Stator-rotor 380/3/60 PWS	
1RKN021	(1)	Roto-statore 220/3/50 PWS	Stator-rotor 220/3/50 PWS	Stator-rotor 220/3/50 PWS	Stator-rotor 220/3/50 PWS	
2CC1140	1	Scheda elettr. C.P.M. 110-220 V	Electr. module C.P.M. 110-220 V	Module CPM 110-220v.	Motorschutz. CPM 110-220v.	
			Accessori / Accessories / Accessoires/ Zubehorteile			
1ACS745	1	Ventilatore ausiliario	Auxiliary head fan	Ventilateur Add	Zusatzlufter	
1CCM090	1	Serie completa guarnizioni	Complete gasket set	Jeu de joints	Dichtungssatz	
2EG1090	1	Resistenza carter 220 Volt	Cranckase heater 220Volt	Résist. du carter 220V	Olsumpfheizung 220Volt	
2EG1520	1	Resistenza carter 110 Volt	Cranckase heater 110Volt	Résist. du carter 110V	Olsumpfheizung 110Volt	
2EG1080	1	Resistenza carter 24 Volt	Cranckase heater 24Volt	Résist. du carter 24V	Olsumpfheizung 24Volt	
2CG1030	1	Sensore D.P.S.	D.P.S. Oil sensor	Detecteur DPS	Sensor DPS	
1LCN005	1	Kit iniezione di liq. D.T.C. compl.	Compl. liq. inj. device D.T.C.	Kit D.T.C. compl.	D.T.C. Bausatz	
1GCM010	1	Valvola di iniezione liquido	Solenoid valve for D.T.C. system	Disp. d'inj. D.T.C.	Magnet-Expansionv. D.T.C.	
2CE1040	1	Sonda di temperatura per D.T.C.	Temp. sensor for D.T.C.	Sonde de temp. D.T.C.	Temperat. D.T.C.	
2CE3010	1	Scheda elettronica per D.T.C.	Electronic module for D.T.C.	D.T.C. Module	D.T.C. Modul	
1LCP011	1	Testa parzial. 220Volt	Controlled capacity head 220V.	Reduction de Puiss. 220v.	Leistungsregelung 220v.	
1LCP025	1	Testa parzial. 110Volt	Controlled capacity head 110V.	Reduction de Puiss. 110v.	Leistungsregelung 110v.	
1LCP020	1	Testa parzial. 24Volt	Controlled capacity head 24V.	Reduction de Puiss. 24v.	Leistungsregelung 24v.	
2P21010	1	Bobina per valvola parz. 220Volt	Coil for solenoid valve 220Volt	Bobine d'electr. 220v.	Magnetspule 220v.	
2P21020	1	Bobina per valvola parz. 110Volt	Coil for solenoid valve 110Volt	Bobine d'electr. 110v.	Magnetspule 110v.	
2P21030	1	Bobina per valvola parz. 24Volt	Coil for solenoid valve 24Volt	Bobine d'electr. 24v.	Magnetspule 24v.	
2P21040	1	Bobina per valv. parz. 24Volt cc	Coil for solenoid valve 24Volt cc	Bobine d'electr. 24v. cc	Magnetspule 24v. cc	
2PY0501	1	Valvola di parzializzazione	Solenoid valve	Vanne regulatrice	Leistungsregelventil	
2CC1140	1	Scheda elettr. C.P.M. 110-220 V	Electr. module C.P.M. 110-220 V	Module CPM 110-220v.	Motorschutz. CPM 110-220v.	
2CC2140	1	Scheda elettr. C.P.M. 24 V	Electr. module C.P.M. 24 V	Module CPM 24v.	Motorschutz. CPM 24v.	

DORIN	M/COMPRESSORE M/COMPRESSORS M/COMPRESSEURS MOTORKOMPRESS.	K2500CC	10/05/1999 N° EM0280	REV. 02

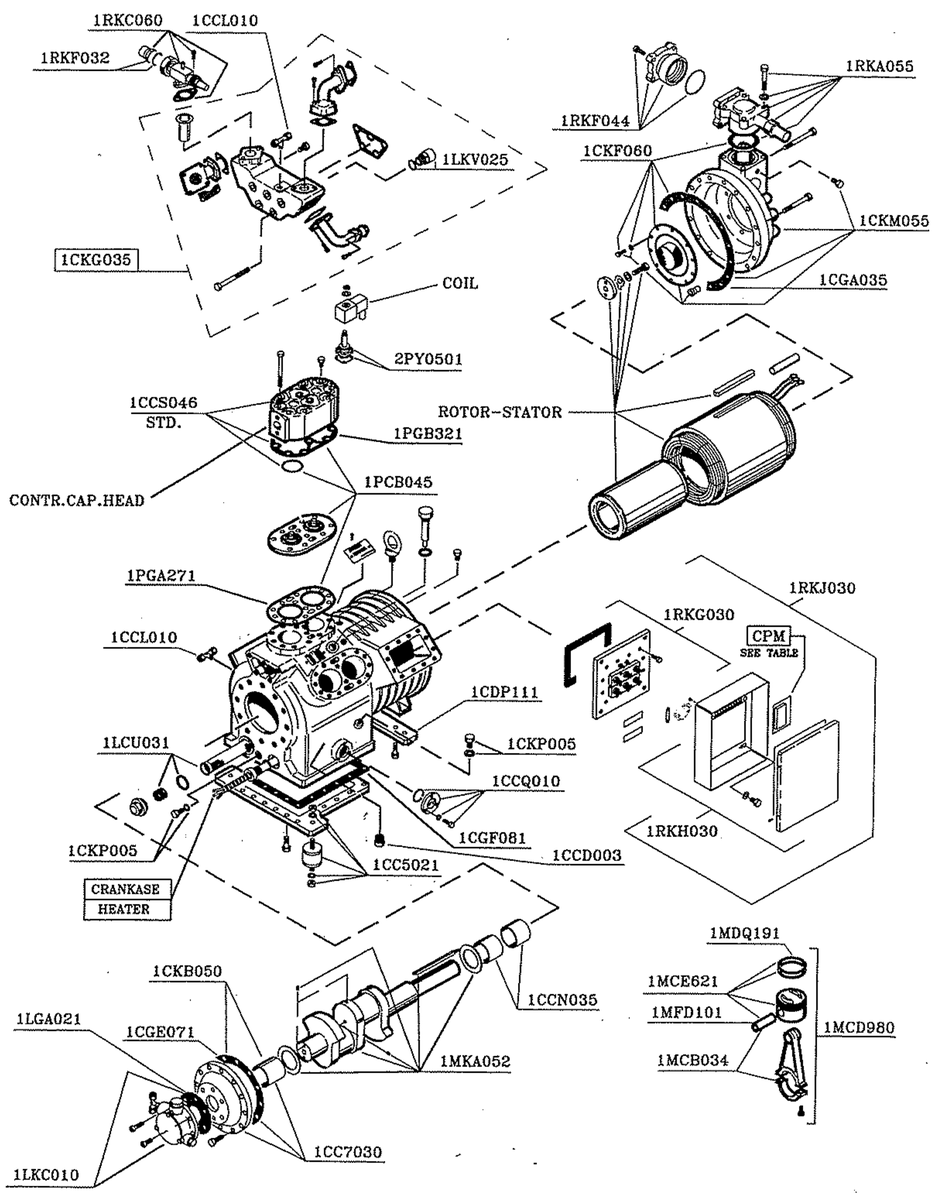

ACCESSORI – ACCESSORIES – ACCESSOIRES – ZUBEHORTEILE

LIQUID INJECTION DEVICE D.T.C.	
COMPLETE SET	1LCN005
VALVE	1GCM010
ELECTRONIC MODULE	2CE3010
TEMP. SENSOR	2CE1040

GASKET SET	1CCM090
AUXILIARI HEAD FAN	1ACS745
D.P.S. SENSOR	2CG1030

CPM	
VOLT	CODE
220	2CC1140
110	2CC1140
24	2CC2140

CRANKASE HEATER	
VOLT	CODE
220	2EG1090
110	2EG1520
24	2EG1080

SUPPLY	ROTOR/STATOR
400/3/50 PWS	1RKM041
220/3/50 PWS	1RKN021
380/3/60 PWS	1RKM044

CONTR.CAP.HEAD	
COIL SUP.	CODE
220	1LCP011
110	1LCP025
24	1LCP020

COIL	
VOLT	CODE
220	2P21010
110	2P21020
24	2P21030
24cc.	2P21040

DEMO

DORIN	M/COMPRESSORE M/COMPRESSORS M/COMPRESSEURS MOTORKOMPRESS.	K2500CC	10/05/99 N° EM0280	REV. 02

Code	Qty	Descrizione	Description	Désignation	Benennung	Mass Kg.
1CC5021	1	Kit Sospensioni compl.	Vibration damper Kit complete	Amortisseur de vibr. compl	Dampfungselement kom.	
1CC7030	1	Mozzo pompa	Oil pump hub	Chapeau a palier compl.	Lagerdeckel kompl.	
1CCD003	1	Valv. rit. olio	Oil check valve	Clapet ret huile	Öldruckschlagven	
1CCL010	1	Presa manometrica TEE 1/4 SAE	Pressure conn. TEE 1/4 SAE	Raccord 1/4 SAE TEE	Anschluss 1/4SAE TEE	
1CCL010	1	Presa manometrica TEE 1/4 SAE	Pressure conn. TEE 1/4 SAE	Raccord 1/4 SAE TEE	Anschluss 1/4SAE TEE	
1CCN035	1	Bronzina centrale	Main Bearing	Coussinet (carter)	Lagerbuchse	
1CCQ010	1	Spia olio completa	Oil sight glass	Voyant du huile	Schauglas	
1CCS046	3	Testa ad aria completa	Air-cooled head	Culasse à air conpl.	Zylinderkopf luft. Kompl.	
1CDP111	1	Staffa lato motore	Crankase support	Pied	Fuss	
1CGA035	1	Guarn. coperchio motore	Motor cover gasket	Joint	Dichtung	
1CGE071	1	Guarnizione mozzo pompa	Hub gasket	Joint, carter/chapeau	Dichtung,Geh./lager.	
1CGF081	1	Guarnizione fondo carter	Cranckase bottom gasket	Joint, fond du carter	Dichtung,Geh./Geh.boden	
1CKB050	1	Bronzina mozzo pompa	Hub Bearing	Coussinet	Lagerbuchse	
1CKF060	1	Filtro di aspirazione	Suction filter and gasket	Filtre d'aspiration	Sauggasfilter	
1CKG035	1	Collettore di mandata compl.	Discharge manifold compl.	Collecteur du refoulement	Schauglaszwinge	
1CKM055	1	Coperchio motore	Electr.motor cover	Couver (cotè motor)	Motordeckel	
1CKP005	1	Tappi Scarica/Carica olio	Screws for oil service	Bouchon pour huile	Schraube	
1CKP005	1	Tappi Scarica/Carica olio	Screws for oil service	Bouchon pour huile	Schraube	
1LCU031	1	Filtro olio compl.	Compl. oil strainer	Filtre huile	Olfilter	
1LGA021	1	Guarnizione pompa olio	Oil pump gasket	Joint, pompe huile	Dichtung	
1LKC010	1	Pompa olio compl.	Oil pump compl.	Pompe huile	Olpumpe kompl.	
1LKV025	2	Valvola sicurezza compl.	Relief valve compl.	Valve de securitè compl.	Sichermeitsven	
1MCB034	6	Biella completa	Complete Connecting rod	Bielle	Pleul kompl.	
1MCD980	6	Kit Biella-Pistone compl.	Conn. rod/ piston compl.	Bielle/Piston compl.	Pleul/Kolben	
1MCE621	6	Pistone completo	Piston complete	Piston compl.	Kolben kompl.	
1MDQ191	12	Segmenti	Rings	Segment étanchèité	Rechteckring	
1MFD101	6	Spinotto	Piston pin	Axe du piston	Bolzenpleuel	
1MKA052	1	Albero completo	Complete Shaft	Vilebbrequin compl.	Kurbelwelle einsch.	
1PCB045	3	Piastra valvole completa	Complete valve plate	Plaque à clapets compl.	Ventilplatte kompl.	
1PGA271	3	Guarnizione P.Valvole-Carter	Valve plate-Carter gasket	Joint,Corps/Plaque a cl.	Dichtung,Geh./Ventilpl.	
1PGB321	3	Guarnizione Testa-P.Valvole	Air head-Valve plate gasket	Joint,Culasse/Plaque cl.	Dichtung, Z.kopf/Ventilpl.	
1RKA055	1	Rubinetto di aspir. D42S	Suction service valve D42S	Vanne d'aspiration D42S	Saugabsperrventil D42S.	
1RKC060	1	Rubinetto di mandata.D28S	Discharge service valve D28S	Vanne de refoul. D28S	Druckabsperrventil D28S	
1RKF032	1	Raccordo estremità rub. scarico	Disch. Pipe conn.	Raccord de Tube Ref.	Rohranschluss	
1RKF044	1	Codolo aspirazione	Suct. Pipe conn.	Raccord de Tube Asp.	Rohranschluss	
1RKG030	1	Piastra attacchi elettrici compl.	Electr.Terminals plate	Plaque à bornes compl.	Stromdurch.platte kompl.	
1RKH030	1	Scatola attacchi elettrici	Complete electrical terminal box	Boite à bornes compl.	Anschl. kompl.	
1RKJ030	1	Scatola attacchi elettrici compl.	Complete electrical terminal box	Boite à bornes compl.	Anschl. kompl.	
1RKM041	1	Roto-statore 400/3/50 PWS	Stator-rotor 400/3/50 PWS	Stator-rotor 400/3/50 PWS	Stator-rotor 400/3/50 PWS	
1RKM044	(1)	Roto-statore 380/3/60 PWS	Stator-rotor 380/3/60 PWS	Stator-rotor 380/3/60 PWS	Stator-rotor 380/3/60 PWS	
1RKN021	(1)	Roto-statore 220/3/50 PWS	Stator-rotor 220/3/50 PWS	Stator-rotor 220/3/50 PWS	Stator-rotor 220/3/50 PWS	
2CC1140	1	Scheda elettr. C.P.M. 110-220 V	Electr. module C.P.M. 110-220 V	Module CPM 110-220v.	Motorschutz. CPM 110-220v.	
			Accessori / Accessories / Accessoires / Zubehorteile			
1ACS745	1	Ventilatore ausiliario	Auxiliary head fan	Ventilateur Add	Zusatzlufter	
1CCM090	1	Serie completa guarnizioni	Complete gasket set	Jeu de joints	Dichtungssatz	
2EG1090	1	Resistenza carter 220 Volt	Cranckase heater 220Volt	Résist. du carter 220V	Olsumpfheizung 220Volt	
2EG1520	1	Resistenza carter 110 Volt	Cranckase heater 110Volt	Résist. du carter 110V	Olsumpfheizung 110Volt	
2EG1080	1	Resistenza carter 24 Volt	Cranckase heater 24Volt	Résist. du carter 24V	Olsumpfheizung 24Volt	
2CG1030	1	Sensore D.P.S.	D.P.S. Oil sensor	Detecteur DPS	Sensor DPS	
1LCN005	1	Kit iniezione di liq. D.T.C. compl.	Compl. liq. inj. device D.T.C.	Kit D.T.C. compl.	D.T.C. Bausatz	
1GCM010	1	Valvola di iniezione liquido	Solenoid valve for D.T.C. system	Disp. d'inj. D.T.C.	Magnet-Expansionv. D.T.C.	
2CE1040	1	Sonda di temperatura per D.T.C.	Temp. sensor for D.T.C.	Sonde de temp. D.T.C.	Temperat. D.T.C.	
2CE3010	1	Scheda elettronica per D.T.C.	Electronic module for D.T.C.	D.T.C. Module	D.T.C. Modul	
1LCP011	1	Testa parzial. 220Volt	Controlled capacity head 220V.	Reduction de Puiss. 220v.	Leistungsregelung 220v.	
1LCP025	1	Testa parzial. 110Volt	Controlled capacity head 110V.	Reduction de Puiss. 110v.	Leistungsregelung 110v.	
1LCP020	1	Testa parzial. 24Volt	Controlled capacity head 24V.	Reduction de Puiss. 24v.	Leistungsregelung 24v.	
2P21010	1	Bobina per valvola parz. 220Volt	Coil for solenoid valve 220Volt	Bobine d'electr. 220v.	Magnetspule 220v.	
2P21020	1	Bobina per valvola parz. 110Volt	Coil for solenoid valve 110Volt	Bobine d'electr. 110v.	Magnetspule 110v.	
2P21030	1	Bobina per valvola parz. 24Volt	Coil for solenoid valve 24Volt	Bobine d'electr. 24v.	Magnetspule 24v.	
2P21040	1	Bobina per valv. parz. 24Volt cc	Coil for solenoid valve 24Volt cc	Bobine d'electr. 24v. cc	Magnetspule 24v. cc	
2PY0501	1	Valvola di parzializzazione	Solenoid valve	Vanne regulatrice	Leistungsregelventil	
2CC1140	1	Scheda elettr. C.P.M. 110-220 V	Electr. module C.P.M. 110-220 V	Module CPM 110-220v.	Motorschutz. CPM 110-220v.	
2CC2140	1	Scheda elettr. C.P.M. 24 V	Electr. module C.P.M. 24 V	Module CPM 24v.	Motorschutz. CPM 24v.	

DORIN	M/COMPRESSORE M/COMPRESSORS M/COMPRESSEURS MOTORKOMPRESS.	K2500CB	10/05/1999 N° EM0281	REV. 02

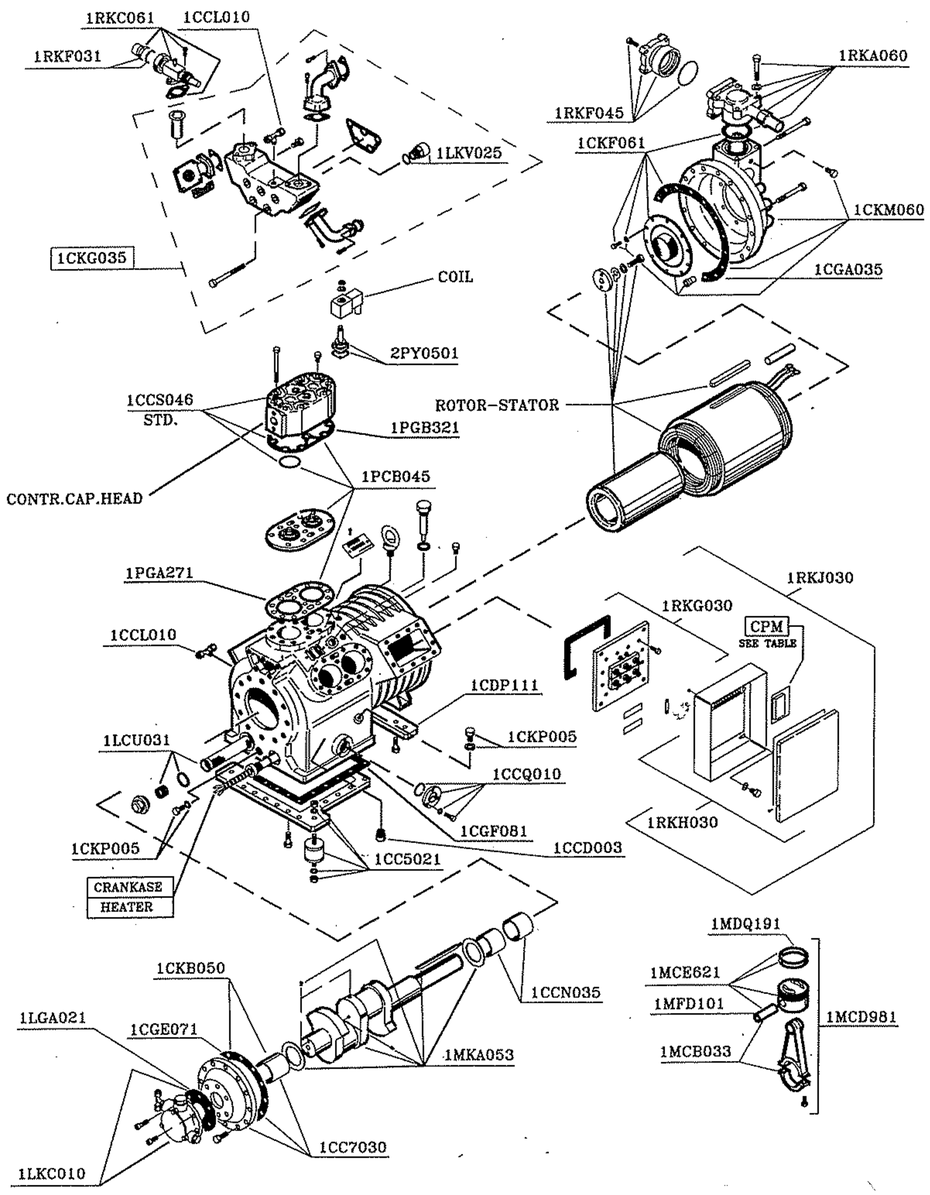

ACCESSORI – ACCESSORIES – ACCESSOIRES – ZUBEHORTEILE

LIQUID INJECTION DEVICE D.T.C.	
COMPLETE SET	1LCN005
VALVE	1GCM010
ELECTRONIC MODULE	2CE3010
TEMP. SENSOR	2CE1040

GASKET SET	1CCM090
AUXILIARI HEAD FAN	1ACS745
D.P.S. SENSOR	2CG1030

CPM	
VOLT	CODE
220	2CC1140
110	2CC1140
24	2CC2140

CRANKASE HEATER	
VOLT	CODE
220	2EG1090
110	2EG1520
24	2EG1080

SUPPLY	ROTOR/STATOR
400/3/50 PWS	1RKM041
220/3/50 PWS	1RKN021
380/3/60 PWS	1RKM044

CONTR.CAP.HEAD	
COIL SUP.	CODE
220	1LCP011
110	1LCP025
24	1LCP020

COIL	
VOLT	CODE
220	2P21010
110	2P21020
24	2P21030
24cc.	2P21040

DEMO

DORIN	M/COMPRESSORE M/COMPRESSORS M/COMPRESSEURS MOTORKOMPRESS.	K2500CB	10/05/99 N° EM0281	REV. 02

Code	Qty	Descrizione	Description	Désignation	Benennung	Mass Kg.
1CC5021	1	Kit Sospensioni compl.	Vibration damper Kit complete	Amortisseur de vibr. compl	Dampfungselement kom.	
1CC7030	1	Mozzo pompa	Oil pump hub	Chapeau a palier compl.	Lagerdeckel kompl.	
1CCD003	1	Valv. rit. olio	Oil check valve	Clapet ret huile	Öldruckschlagven	
1CCL010	1	Presa manometrica TEE 1/4 SAE	Pressure conn. TEE 1/4 SAE	Raccord 1/4 SAE TEE	Anschluss 1/4SAE TEE	
1CCL010	1	Presa manometrica TEE 1/4 SAE	Pressure conn. TEE 1/4 SAE	Raccord 1/4 SAE TEE	Anschluss 1/4SAE TEE	
1CCN035	1	Bronzina centrale	Main Bearing	Coussinet (carter)	Lagerbuchse	
1CCQ010	1	Spia olio completa	Oil sight glass	Voyant du huile	Schauglas	
1CCS046	3	Testa ad aria completa	Air-cooled head	Culasse à air conpl.	Zylinderkopf luft. Kompl.	
1CDP111	1	Staffa lato motore	Crankase support	Pied	Fuss	
1CGA035	1	Guarn. coperchio motore	Motor cover gasket	Joint	Dichtung	
1CGE071	1	Guarnizione mozzo pompa	Hub gasket	Joint, carter/chapeau	Dichtung,Geh./lager.	
1CGF081	1	Guarnizione fondo carter	Cranckase bottom gasket	Joint, fond du carter	Dichtung,Geh./Geh.boden	
1CKB050	1	Bronzina mozzo pompa	Hub Bearing	Coussinet	Lagerbuchse	
1CKF061	1	Filtro di aspirazione	Suction filter and gasket	Filtre d'aspiration	Sauggasfilter	
1CKG035	1	Collettore di mandata compl.	Discharge manifold compl.	Collecteur du refoulement	Schauglaszwinge	
1CKM060	1	Coperchio motore	Electr.motor cover	Couver (cotè motor)	Motordeckel	
1CKP005	1	Tappi Scarica/Carica olio	Screws for oil service	Bouchon pour huile	Schraube	
1CKP005	1	Tappi Scarica/Carica olio	Screws for oil service	Bouchon pour huile	Schraube	
1LCU031	1	Filtro olio compl.	Compl. oil strainer	Filtre huile	Olfilter	
1LGA021	1	Guarnizione pompa olio	Oil pump gasket	Joint, pompe huile	Dichtung	
1LKC010	1	Pompa olio compl.	Oil pump compl.	Pompe huile	Olpumpe kompl.	
1LKV025	2	Valvola sicurezza compl.	Relief valve compl.	Valve de securitè compl.	Sichermeitsven	
1MCB033	6	Biella completa	Complete Connecting rod	Bielle	Pleul kompl.	
1MCD981	6	Kit Biella-Pistone compl.	Conn. rod/ piston compl.	Bielle/Piston compl.	Pleul/Kolben	
1MCE621	6	Pistone completo	Piston complete	Piston compl.	Kolben kompl.	
1MDQ191	12	Segmenti	Rings	Segment étanchèité	Rechteckring	
1MFD101	6	Spinotto	Piston pin	Axe du piston	Bolzenpleuel	
1MKA053	1	Albero completo	Complete Shaft	Vilebbrequin compl.	Kurbelwelle einsch.	
1PCB045	3	Piastra valvole completa	Complete valve plate	Plaque à clapets compl.	Ventilplatte kompl.	
1PGA271	3	Guarnizione P.Valvole-Carter	Valve plate-Carter gasket	Joint,Corps/Plaque a cl.	Dichtung,Geh./Ventilpl.	
1PGB321	3	Guarnizione Testa-P.Valvole	Air head-Valve plate gasket	Joint,Culasse/Plaque cl.	Dichtung, Z.kopf/Ventilpl.	
1RKA060	1	Rubinetto di aspir. D54S	Suction service valve D54S	Vanne d'aspiration D54S	Saugabsperrventil D54S.	
1RKC061	1	Rubinetto di mandata.D35S	Discharge service valve D35S	Vanne de refoul. D35S	Druckabsperrventil D35S	
1RKF031	1	Raccordo estremità rub. scarico	Disch. Pipe conn.	Raccord de Tube Ref.	Rohranschluss	
1RKF045	1	Codolo aspirazione	Suct. Pipe conn.	Raccord de Tube Asp.	Rohranschluss	
1RKG030	1	Piastra attacchi elettrici compl.	Electr.Terminals plate	Plaque à bornes compl.	Stromdurch.platte kompl.	
1RKH030	1	Scatola attacchi elettrici	Complete electrical terminal box	Boite à bornes compl.	Anschl. kompl.	
1RKJ030	1	Scatola attacchi elettrici compl.	Complete electrical terminal box	Boite à bornes compl.	Anschl. kompl.	
1RKM041	1	Roto-statore 400/3/50 PWS	Stator-rotor 400/3/50 PWS	Stator-rotor 400/3/50 PWS	Stator-rotor 400/3/50 PWS	
1RKM044	(1)	Roto-statore 380/3/60 PWS	Stator-rotor 380/3/60 PWS	Stator-rotor 380/3/60 PWS	Stator-rotor 380/3/60 PWS	
1RKN021	(1)	Roto-statore 220/3/50 PWS	Stator-rotor 220/3/50 PWS	Stator-rotor 220/3/50 PWS	Stator-rotor 220/3/50 PWS	
2CC1140	1	Scheda elettr. C.P.M. 110-220 V	Electr. module C.P.M. 110-220 V	Module CPM 110-220v.	Motorschutz. CPM 110-220v.	
			Accessori / Accessories / Accessoires / Zubehorteile			
1ACS745	1	Ventilatore ausiliario	Auxiliary head fan	Ventilateur Add	Zusatzlufter	
1CCM090	1	Serie completa guarnizioni	Complete gasket set	Jeu de joints	Dichtungssatz	
2EG1090	1	Resistenza carter 220 Volt	Cranckase heater 220Volt	Résist. du carter 220V	Olsumpfheizung 220Volt	
2EG1520	1	Resistenza carter 110 Volt	Cranckase heater 110Volt	Résist. du carter 110V	Olsumpfheizung 110Volt	
2EG1080	1	Resistenza carter 24 Volt	Cranckase heater 24Volt	Résist. du carter 24V	Olsumpfheizung 24Volt	
2CG1030	1	Sensore D.P.S.	D.P.S. Oil sensor	Detecteur DPS	Sensor DPS	
1LCN005	1	Kit iniezione di liq. D.T.C. compl.	Compl. liq. inj. device D.T.C.	Kit D.T.C. compl.	D.T.C. Bausatz	
1GCM010	1	Valvola di iniezione liquido	Solenoid valve for D.T.C. system	Disp. d'inj. D.T.C.	Magnet-Expansionv. D.T.C.	
2CE1040	1	Sonda di temperatura per D.T.C.	Temp. sensor for D.T.C.	Sonde de temp. D.T.C.	Temperat. D.T.C.	
2CE3010	1	Scheda elettronica per D.T.C.	Electronic module for D.T.C.	D.T.C. Module	D.T.C. Modul	
1LCP011	1	Testa parzial. 220Volt	Controlled capacity head 220V.	Reduction de Puiss. 220v.	Leistungsregelung 220v.	
1LCP025	1	Testa parzial. 110Volt	Controlled capacity head 110V.	Reduction de Puiss. 110v.	Leistungsregelung 110v.	
1LCP020	1	Testa parzial. 24Volt	Controlled capacity head 24V.	Reduction de Puiss. 24v.	Leistungsregelung 24v.	
2P21010	1	Bobina per valvola parz. 220Volt	Coil for solenoid valve 220Volt	Bobine d'electr. 220v.	Magnetspule 220v.	
2P21020	1	Bobina per valvola parz. 110Volt	Coil for solenoid valve 110Volt	Bobine d'electr. 110v.	Magnetspule 110v.	
2P21030	1	Bobina per valvola parz. 24Volt	Coil for solenoid valve 24Volt	Bobine d'electr. 24v.	Magnetspule 24v.	
2P21040	1	Bobina per valv. parz. 24Volt cc	Coil for solenoid valve 24Volt cc	Bobine d'electr. 24v. cc	Magnetspule 24v. cc	
2PY0501	1	Valvola di parzializzazione	Solenoid valve	Vanne regulatrice	Leistungsregelventil	
2CC1140	1	Scheda elettr. C.P.M. 110-220 V	Electr. module C.P.M. 110-220 V	Module CPM 110-220v.	Motorschutz. CPM 110-220v.	
2CC2140	1	Scheda elettr. C.P.M. 24 V	Electr. module C.P.M. 24 V	Module CPM 24v.	Motorschutz. CPM 24v.	

DORIN	M/COMPRESSORE M/COMPRESSORS M/COMPRESSEURS MOTORKOMPRESS.	K3000CC	10/05/1999 N° EM0282	REV. 02

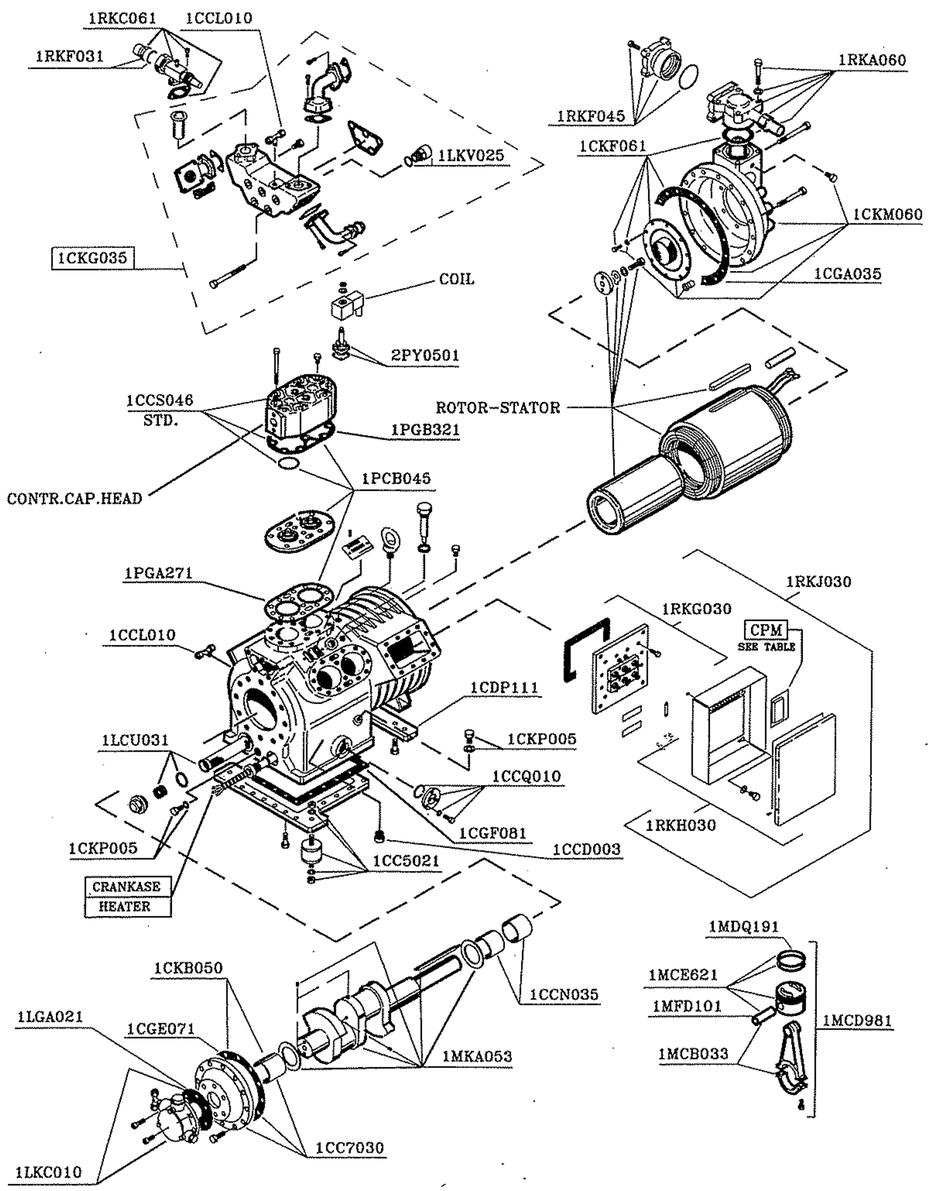

ACCESSORI – ACCESSORIES – ACCESSOIRES – ZUBEHORTEILE

LIQUID INJECTION DEVICE D.T.C.	
COMPLETE SET	1LCN005
VALVE	1GCM010
ELECTRONIC MODULE	2CE3010
TEMP. SENSOR	2CE1040

GASKET SET	1CCM090
AUXILIARI HEAD FAN	1ACS745
D.P.S. SENSOR	2CG1030

CPM	
VOLT	CODE
220	2CC1140
110	2CC1140
24	2CC2140

CRANKASE HEATER	
VOLT	CODE
220	2EG1090
110	2EG1520
24	2EG1080

SUPPLY	ROTOR/STATOR
400/3/50 PWS	1RKM042
220/3/50 PWS	1RKN022
380/3/60 PWS	1RKM045

CONTR.CAP.HEAD	
COIL SUP.	CODE
220	1LCP011
110	1LCP025
24	1LCP020

COIL	
VOLT	CODE
220	2P21010
110	2P21020
24	2P21030
24cc.	2P21040

DEMO

DORIN	M/COMPRESSORE M/COMPRESSORS M/COMPRESSEURS MOTORKOMPRESS.	K3000CC	10/05/99 N° EM0282	REV. 02

Code	Qty	Descrizione	Description	Désignation	Benennung	Mass Kg.
1CC5021	1	Kit Sospensioni compl.	Vibration damper Kit complete	Amortisseur de vibr. compl	Dampfungselement kom.	
1CC7030	1	Mozzo pompa	Oil pump hub	Chapeau a palier compl.	Lagerdeckel kompl.	
1CCD003	1	Valv. rit. olio	Oil check valve	Clapet ret huile	Öldruckschlagven	
1CCL010	1	Presa manometrica TEE 1/4 SAE	Pressure conn. TEE 1/4 SAE	Raccord 1/4 SAE TEE	Anschluss 1/4SAE TEE	
1CCL010	1	Presa manometrica TEE 1/4 SAE	Pressure conn. TEE 1/4 SAE	Raccord 1/4 SAE TEE	Anschluss 1/4SAE TEE	
1CCN035	1	Bronzina centrale	Main Bearing	Coussinet (carter)	Lagerbuchse	
1CCQ010	1	Spia olio completa	Oil sight glass	Voyant du huile	Schauglas	
1CCS046	3	Testa ad aria completa	Air-cooled head	Culasse à air conpl.	Zylinderkopf luft. Kompl.	
1CDP111	1	Staffa lato motore	Crankase support	Pied	Fuss	
1CGA035	1	Guam. coperchio motore	Motor cover gasket	Joint	Dichtung	
1CGE071	1	Guarnizione mozzo pompa	Hub gasket	Joint, carter/chapeau	Dichtung,Geh./lager.	
1CGF081	1	Guarnizione fondo carter	Cranckase bottom gasket	Joint, fond du carter	Dichtung,Geh./Geh.boden	
1CKB050	1	Bronzina mozzo pompa	Hub Bearing	Coussinet	Lagerbuchse	
1CKF061	1	Filtro di aspirazione	Suction filter and gasket	Filtre d'aspiration	Sauggasfilter	
1CKG035	1	Collettore di mandata compl.	Discharge manifold compl.	Collecteur du refoulement	Schauglaszwinge	
1CKM060	1	Coperchio motore	Electr.motor cover	Couver (cotè motor)	Motordeckel	
1CKP005	1	Tappi Scarica/Carica olio	Screws for oil service	Bouchon pour huile	Schraube	
1CKP005	1	Tappi Scarica/Carica olio	Screws for oil service	Bouchon pour huile	Schraube	
1LCU031	1	Filtro olio compl.	Compl. oil strainer	Filtre huile	Olfilter	
1LGA021	1	Guarnizione pompa olio	Oil pump gasket	Joint, pompe huile	Dichtung	
1LKC010	1	Pompa olio compl.	Oil pump compl.	Pompe huile	Olpumpe kompl.	
1LKV025	2	Valvola sicurezza compl.	Relief valve compl.	Valve de securitè compl.	Sichermeitsven	
1MCB033	6	Biella completa	Complete Connecting rod	Bielle	Pleul kompl.	
1MCD981	6	Kit Biella-Pistone compl.	Conn. rod/ piston compl.	Bielle/Piston compl.	Pleul/Kolben	
1MCE621	6	Pistone completo	Piston complete	Piston compl.	Kolben kompl.	
1MDQ191	12	Segmenti	Rings	Segment étanchèité	Rechteckring	
1MFD101	6	Spinotto	Piston pin	Axe du piston	Bolzenpleuel	
1MKA053	1	Albero completo	Complete Shaft	Vilebbrequin compl.	Kurbelwelle einsch.	
1PCB045	3	Piastra valvole completa	Complete valve plate	Plaque à clapets compl.	Ventilplatte kompl.	
1PGA271	3	Guarnizione P.Valvole-Carter	Valve plate-Carter gasket	Joint,Corps/Plaque a cl.	Dichtung,Geh./Ventilpl.	
1PGB321	3	Guarnizione Testa-P.Valvole	Air head-Valve plate gasket	Joint,Culasse/Plaque cl.	Dichtung, Z.kopf/Ventilpl.	
1RKA060	1	Rubinetto di aspir. D54S	Suction service valve D54S	Vanne d'aspiration D54S	Saugabsperrventil D54S.	
1RKC061	1	Rubinetto di mandata.D35S	Discharge service valve D35S	Vanne de refoul. D35S	Druckabsperrventil D35S	
1RKF031	1	Raccordo estremità rub. scarico	Disch. Pipe conn.	Raccord de Tube Ref.	Rohranschluss	
1RKF045	1	Codolo aspirazione	Suct. Pipe conn.	Raccord de Tube Asp.	Rohranschluss	
1RKG030	1	Piastra attacchi elettrici compl.	Electr.Terminals plate	Plaque à bornes compl.	Stromdurch.platte kompl.	
1RKH030	1	Scatola attacchi elettrici	Complete electrical terminal box	Boite à bornes compl.	Anschl. kompl.	
1RKJ030	1	Scatola attacchi elettrici compl.	Complete electrical terminal box	Boite à bornes compl.	Anschl. kompl.	
1RKM042	1	Roto-statore 400/3/50 PWS	Stator-rotor 400/3/50 PWS	Stator-rotor 400/3/50 PWS	Stator-rotor 400/3/50 PWS	
1RKM045	(1)	Roto-statore 380/3/60 PWS	Stator-rotor 380/3/60 PWS	Stator-rotor 380/3/60 PWS	Stator-rotor 380/3/60 PWS	
1RKN022	(1)	Roto-statore 220/3/50 PWS	Stator-rotor 220/3/50 PWS	Stator-rotor 220/3/50 PWS	Stator-rotor 220/3/50 PWS	
2CC1140	1	Scheda elettr. C.P.M.110-220 V	Electr. module C.P.M. 110- 220 V	Module CPM 110-220v.	Motorschutz. CPM 110-220v.	
			Accessori / Accessories / Accessoires / Zubehorteile			
1ACS745	1	Ventilatore ausiliario	Auxiliary head fan	Ventilateur Add	Zusatzlufter	
1CCM090	1	Serie completa guarnizioni	Complete gasket set	Jeu de joints	Dichtungssatz	
2EG1090	1	Resistenza carter 220 Volt	Cranckase heater 220Volt	Résist. du carter 220V	Olsumpfheizung 220Volt	
2EG1520	1	Resistenza carter 110 Volt	Cranckase heater 110Volt	Résist. du carter 110V	Olsumpfheizung 110Volt	
2EG1080	1	Resistenza carter 24 Volt	Cranckase heater 24Volt	Résist. du carter 24V	Olsumpfheizung 24Volt	
2CG1030	1	Sensore D.P.S.	D.P.S. Oil sensor	Detecteur DPS	Sensor DPS	
1LCN005	1	Kit iniezione di liq. D.T.C. compl.	Compl. liq. inj. device D.T.C.	Kit D.T.C. compl.	D.T.C. Bausatz	
1GCM010	1	Valvola di iniezione liquido	Solenoid valve for D.T.C. system	Disp. d'inj. D.T.C.	Magnet-Expansionv. D.T.C.	
2CE1040	1	Sonda di temperatura per D.T.C.	Temp. sensor for D.T.C.	Sonde de temp. D.T.C.	Temperat. D.T.C.	
2CE3010	1	Scheda elettronica per D.T.C.	Electronic module for D.T.C.	D.T.C. Module	D.T.C. Modul	
1LCP011	1	Testa parzial. 220Volt	Controlled capacity head 220V.	Reduction de Puiss. 220v.	Leistungsregelung 220v.	
1LCP025	1	Testa parzial. 110Volt	Controlled capacity head 110V.	Reduction de Puiss. 110v.	Leistungsregelung 110v.	
1LCP020	1	Testa parzial. 24Volt	Controlled capacity head 24V.	Reduction de Puiss. 24v.	Leistungsregelung 24v.	
2P21010	1	Bobina per valvola parz. 220Volt	Coil for solenoid valve 220Volt	Bobine d'electr. 220v.	Magnetspule 220v.	
2P21020	1	Bobina per valvola parz. 110Volt	Coil for solenoid valve 110Volt	Bobine d'electr. 110v.	Magnetspule 110v.	
2P21030	1	Bobina per valvola parz. 24Volt	Coil for solenoid valve 24Volt	Bobine d'electr. 24v.	Magnetspule 24v.	
2P21040	1	Bobina per valv. parz. 24Volt cc	Coil for solenoid valve 24Volt cc	Bobine d'electr. 24v. cc	Magnetspule 24v. cc	
2PY0501	1	Valvola di parzializzazione	Solenoid valve	Vanne regulatrice	Leistungsregelventil	
2CC1140	1	Scheda elettr. C.P.M. 110-220 V	Electr. module C.P.M. 110-220 V	Module CPM 110-220v.	Motorschutz. CPM 110-220v.	
2CC2140	1	Scheda elettr. C.P.M. 24 V	Electr. module C.P.M. 24 V	Module CPM 24v.	Motorschutz. CPM 24v.	

GARANZIE

Le OFFICINE DORIN, che impiegano esclusivamente materiali delle migliori qualità e sono attrezzate per una perfetta lavorazione, s'impegnano a sostituire o riparare gratuitamente quelle parti che durante il normale funzionamento rivelassero difetti nel materiale o nella lavorazione entro UN ANNO dalla data della fattura.
L'impegno di cui sopra è escluso ove i difetti di qualsiasi genere derivino da incidenti, manomissioni, inadeguato o cattivo uso o manutenzione.
Nessun risarcimento dei danni potrà comunque essere mai richiesto alle OFFICINE DORIN in relazione all'impegno come sopra assunto, che resta esclusivamente limitato alla sola riparazione o sostituzione di pezzi, entro un anno dalla data della fattura.
I Rappresentanti o Rivenditori non sono autorizzati ad impegnare le OFFICINE DORIN oltre i limiti dell'impegno suddetto. Le parti difettose dovranno essere consegnate franco nostra officina e saranno spedite franco destino. La bruciatura dell'avvolgimento dello statore rientra nella garanzia annuale purché la bruciatura dipenda da difetto di fabbricazione e non da difetto di alimentazione o di adeguata protezione.
Dall'impegno di cui sopra sono escluse le parti che non sono costruite dalle OFFICINE DORIN e cioè i motoventilatori, gli apparecchi di regolazione e di controllo, per i quali varranno naturalmente le specifiche garanzie offerte dalle Ditte costruttrici.

GARANTIES

L'OFFICINE MARIO DORIN, emploie exclusivement des matériaux de première qualité. L'équipement des unités de production permet un niveau de fabrication parfait.
L'OFFICINE MARIO DORIN s'engage à remplacer où à réparer gratuitement les pièces qui, au cours d'un fonctionnement normal, aurait présenté un vice de construction ou un défaut de matière; ceci pour une durée d'UN AN à partir de la date de facturation. Cette clause de garantie exclus tous défauts causés par des fausses manoeuvres, un mauvais usage, ou un entretien inadapté. De même, aucun dédommagement ne pourra être demandé à l'OFFICINE MARIO DORIN à propos de l'engagement pris ci-dessus, qui reste exclusivement limité à la réparation ou au remplacement des piècers, pendant un an à partir de la date de la facture.
Les Représentants ou revendeurs ne sont pas autorisé à engager l'OFFICINE MARIO DORIN au-delà des limites des conditions citées ci-dessus. Le pièces défectueuses devront être envoyées franco à notre usine et les pièces de remplacement seront expédiées franco à destination. La détérioration des enroulements du stator est incluse dans la garantie quand celle-ci provient d'un défaut de fabrication et non pas d'un défaut d'alimentation ou de protection non appropriée.
L'engagement ci-dessus exclut les pièces et accessoires non fabriqués par l'OFFICINE MARIO DORIN, c'est à dire, les motoventilateurs, les appareils de réglage et de contrôle.
Bien entendu ces pièces peuvent faire l'objet de garanties spécifiques offertes par les fabricants.
Toute commande de matériel passé à l'OFFICINE MARIO DORIN, inclut automatiquement l'acceptation de ces clauses de garantie (sauf accord particulier).

WARRANTY

OFFICINE DORIN only use materials of the highest quality and a very high standard of workmanship in their production and will at their discretion replace or repari free of charge any parts which during normal usage prove to be faulty within 12 months from date of their invoice.
This warranty does not apply when the defect is due to: accidental damages, misuse, lack of maintenance or lack of appropriate protection.
Under no circumstances will DORIN entertain claims for consequential loss or damage-persons or property.
No third pary nor an agent is authorised to alter the terms of this warranty faulty materials are to be returned carriage paid to DORIN Florence.
Stator burn-out is included in above warranty when it is a consequence of a production defect and not a misconnection wrong voltage or misprotection.
Above commitment does not include components which are not DORIN production, such as fans, protection and control devices for which suppliers warranty only applies.

DEMO

GARANTIEBEDINGUNGEN

Da die Firma DORIN ausschließlich beste Materiälen bei sorgfüaltigster Verarbeitung verwendet, verpflichtet sie sich bis zu EINEM JAHR nach Rechnungsdatum für alle, bei ordentlichem Betrieb ausfallenden Teile, kostenlosen Ersatz bzw. Instandsetzung zu leisten.
Diese Garantieverpflichtung erlischt bei Schäden die durch mangelhafte Installation, Bedienung und/oder Betrieb, sowie durch Unfälle verursacht werden. Folgeschäden und Nebenkosten werden von der Firm DORIN keinesfalls ersetzt. Die Garantie ist eine reine einjährige Materialgarantie wie oben beschrieben. Händler und Vertretungen sind zu keinen weiteren Zusagen über diese Materialgarantie der Firma DORIN hinaus, autorisiert.
Die fehlerhaften Teile sind frachtfrei dem Werk zuzusenden und frachtfrei werden die Austauschteile an den Bestimmungsort zurückgesandt.
Durchgebrannte Statorwicklungen sind in der einjährigen Garantie eingeschlossen, wenn sie durch Fabrikationsmangel ausgefallen sind und nicht durch mangelhaften Motorschutz bzw. falsche Netzspannung.
Von obiger Verpflichtung sind alle nicht von der Firma DORIN hergestellten Teile ausgeschlossen (Vent. Motoren, Stell-und Kontrollgeräte), die auf Kundenwunsch beigestellt wurden. Für diese Teile gelten die Garantiebendingungen der jeweiligen Hersteller.

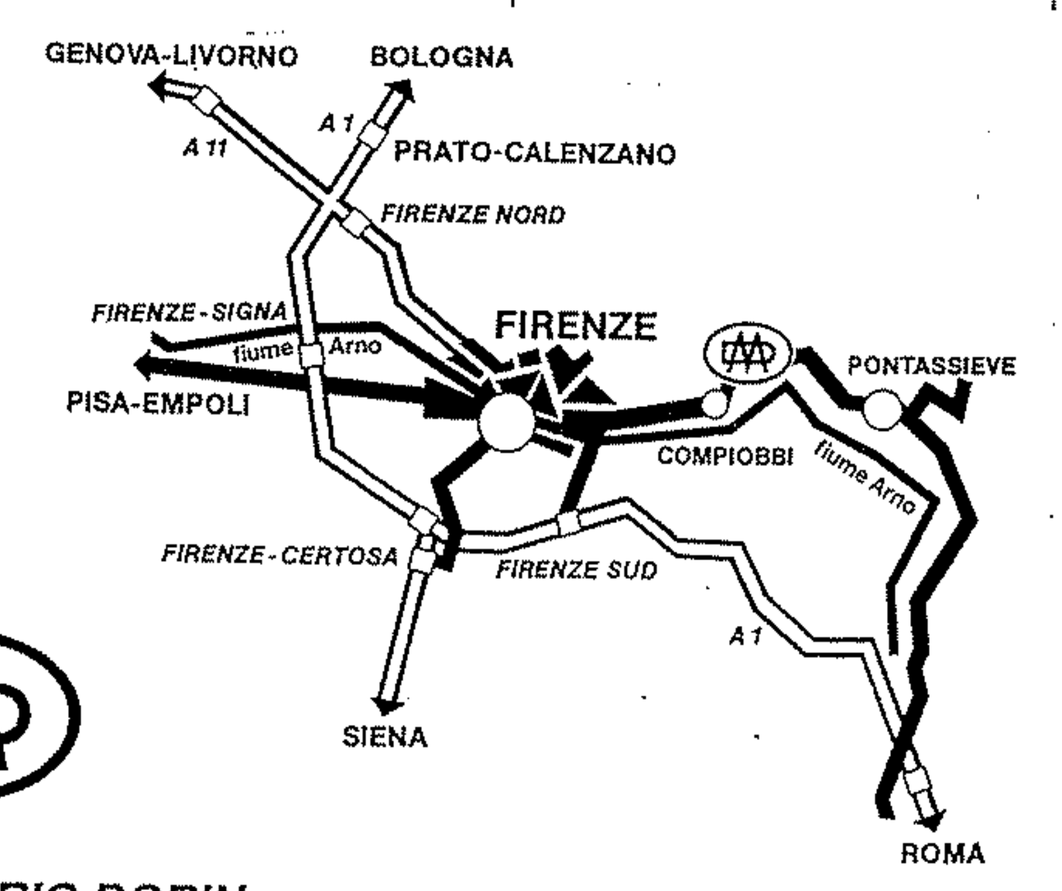

OFFICINE MARIO DORIN
via aretina, 388
50061 COMPIOBBI FIRENZE
ITALIA

Téléphone: +39/055/623211
Fax: +39/055/62621380
INTERNET: http://www.dorin.com
E-mail: dorin@dorin.com