RICAMBI
SPARE PARTS
ERSATZTEILE
PIECES DETACHEES

MOTOCOMPRESSORI SEMIERMETICI
SEMI-HERMETIC MOTOR-COMPRESSORS
MOTOR-COMPRESSEURS SEMI-HERMETIQUES
HALBHERMETISCHE MOTORKOMPRESSOREN

K400CC
÷
K740CC

DEMO

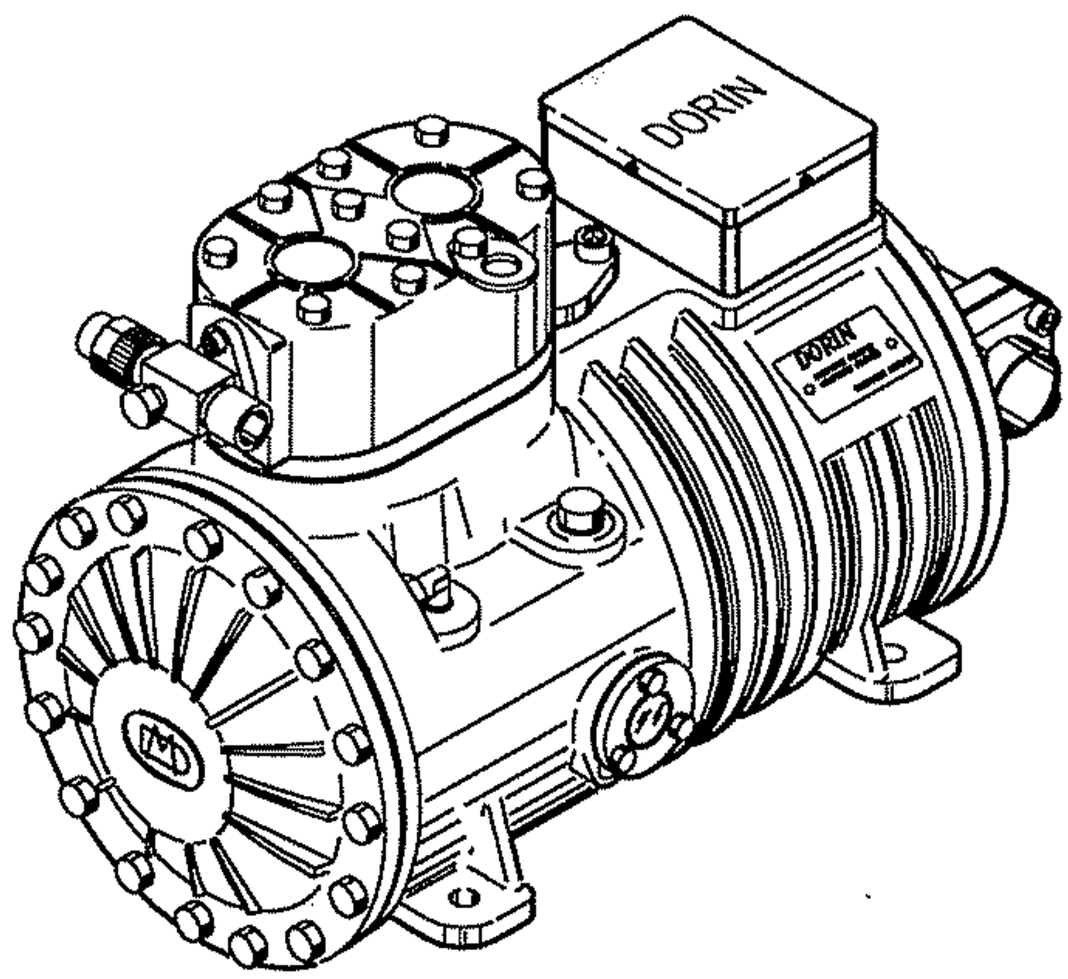

K3

DORIN

DORIN	M/COMPRESSORE M/COMPRESSORS M/COMPRESSEURS MOTORKOMPRESS.	K400CC	10/05/1999 N° EM0193	REV. 02

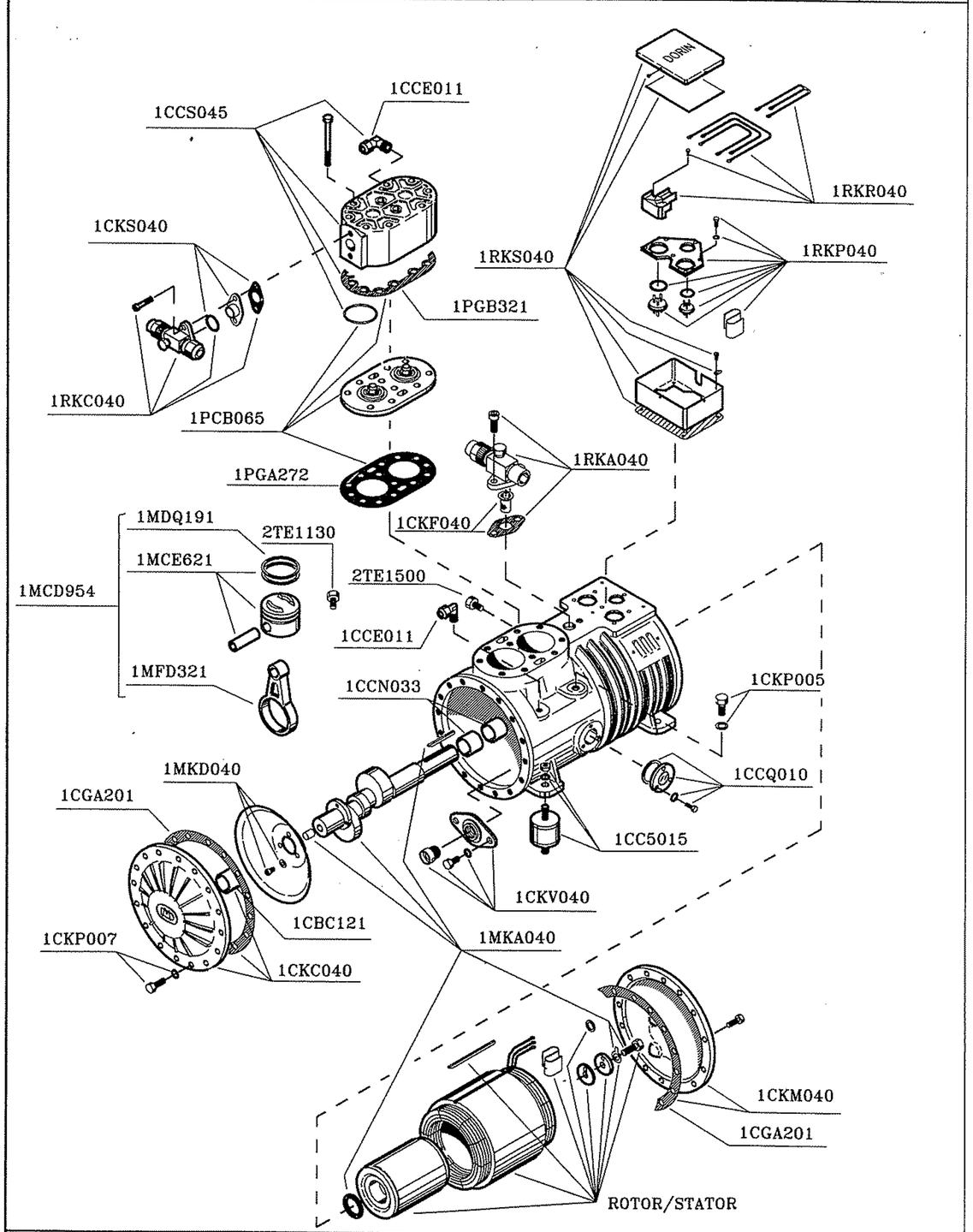

ACCESSORI – ACCESSORIES – ACCESSOIRES – ZUBEHORTEILE

GASKET SET	1CCM085
WATER COOLER HEAD	1CCT025
AUXILIARI HEAD FAN	1ACS380

CRANKASE HEATER	
VOLT	CODE
220	2EG2020
110	2EG1050
48	2EG1070
24	2EG1080

LIQUID INJECTION DEVICE D.T.C.	
COMPLETE SET	1LCN013
VALVE	1GCM010
ELECTRONIC MODULE	2CE3010
TEMP. SENSOR	2CE1040

SUPPLY	ROTOR/STATOR CODE
220–380/3/50	1RKK040
220–380/3/60	1RKK048
200/3/60	1RKK048
200/3/50–60	1RKK048
380 △/3/50	1RKL035

DEMO

DORIN	M/COMPRESSORE M/COMPRESSORS M/COMPRESSEURS MOTORKOMPRESS.	K400CC	03/11/98 N° EM0193	REV. 02

Code	Qty	Descrizione	Description	Désignation	Benennung	Mass Kg.
1CBC121	1	Bronzina coperchio	Cover Bearing	Coussinet	Lagerbuchse	
1CCE011	1	Presa manometrica 1/4 SAE	Pressure connection 1/4 SAE	Raccord 1/4 SAE	Anschluss 1/4SAE	
1CCE011	1	Presa manometrica 1/4 SAE	Pressure connection 1/4 SAE	Raccord 1/4 SAE	Anschluss 1/4SAE	
1CC5015	1	Kit Sospensioni compl.	Vibration damper Kit complete	Amortisseur de vibr. compl.	Dampfungselement kom.	
1CCN033	1	Bronzina centrale	Main Bearing	Coussinet (carter)	Lagerbuchse	
1CCQ010	1	Spia olio completa	Oil sight glass	Voyant du huile	Schauglas	
1CCS045	1	Testa ad aria completa	Air-cooled head	Culasse à air conpl.	Zylinderkopf luft. Kompl.	
1CGA201	1	Guarn. coperchio motore	Motor cover gasket	Joint	Dichtung	
1CGA201	1	Guarnizione coperchio cil.	Cyl. cover gasket	Joint, carter/couv.cylindre	Dichtung,Geh./Zylind.	
1CKC040	1	Coperchio cilindri	Cylinder cover	Couvert cylindre	Zylinderdeckel	
1CKF040	1	Filtro di aspirazione	Suction filter and gasket	Filtre d'aspiration	Sauggasfilter	
1CKM040	1	Coperchio motore	Electr.motor cover	Couver (cotè motor)	Motordeckel	
1CKP005	1	Tappo Carica olio	Screws for oil service	Bouchon pour huile	Schraube	
1CKP007	1	Tappo Scarica olio	Screws for oil service	Bouchon pour huile	Schraube	
1CKS040	1	Trafilatore di mandata compl.	Pulsation red. flange	Plaque de Silencieux	Geräuschdämpf	
1CKV040	1	Valvola ritegno olio compl.	Oil check valve compl.	Clap. Ret. Huile	Öldrucksschlagren	
1MCD954	2	Kit Biella-Pistone	Conn. rod/ piston compl.	Bielle/Piston compl.	Pleul/Kolben	
1MCE621	2	Pistone completo	Piston complete	Piston compl.	Kolben kompl.	
1MKD040	1	Disco sbattiolio	Oil centrifugal disk	Disque huile	Discheibe	
1MDQ191	4	Segmenti	Rings	Segment étanchèité	Rechteckring	
1MFD321	2	Biella	Connecting rod	Bielle	Pleul	
1MKA040	1	Albero completo	Complete Shaft	Vilebbrequin compl.	Kurbelwelle einsch.	
1PCB065	1	Piastra valvole completa	Complete valve plate	Plaque à clapets compl.	Ventilplatte kompl.	
1PGA272	1	Guarnizione P.Valvole-Carter	Valve plate-Carter gasket	Joint,Corps/Plaque a cl.	Dichtung,Geh./Ventilpl.	
1PGB321	1	Guarnizione Testa-P.Valvole	Air head-Valve plate gasket	Joint,Culasse/Plaque cl.	Dichtung, Z.kopf/Ventilpl.	
1RKA040	1	Rubinetto di aspir. D28S	Suction service valve D28S	Vanne d'aspiration D28S	Saugabsperrventil D28S.	
1RKC040	1	Rubinetto di mandata.D16S	Discharge service valve D16S	Vanne de refoul. D16S	Druckabsperrventil D16S	
1RKK040	1	Roto-statore 220/380/3/50	Stator-rotor 220/380/3/50	Stator-rotor 220/380/3/50	Stator-rotor 220/380/3/50	
1RKK048	(1)	Roto-statore 220/380/3/60	Stator-rotor 220/380/3/60	Stator-rotor 220/380/3/60	Stator-rotor 220/380/3/60	
1RKL035	(1)	Roto-statore 380/3/50 Triang.	Stator-rotor 380/3/50 DELTA	Stator-rotor 380/3/50 DELTA	Stator-rotor 380/3/50 DELTA	
1RKP040	1	Insieme passanti elettrici compl.	Electr.Terminals plate	Plaque à bornes compl.	Stromdurch.platte kompl.	
1RKR040	1	Insieme terminali elettrici compl.	Electr. blocks Kit	Passant	Durchgang	
1RKS040	1	Scatola attacchi elettrici	Complete electrical terminal box	Boite à bornes compl.	Anschl. kompl.	
2TE1130	1	Tappo	Screws	Bouchon	Schraube	
2TE1500	1	Tappo	Screws	Bouchon	Schraube	
			Accessori / Accessories / Accessoires / Zubehorteile			
1ACS380	1	Ventilatore ausiliario	Auxiliary head fan	Ventilateur Add	Zusatzlufter	
1CCM085	1	Serie completa guarnizioni	Complete gasket set	Jeu de joints	Dichtungssatz	
1CCT025	1	Testa raffreddata ad acqua	Water-cooled head	Culasse refr.-par eau	Zylinderkopf ,wasserg.	
2EG2020	1	Resistenza carter 220 Volt	Cranckase heater 220Volt	Résist. du carter 220V	Olsumpfheizung 220Volt	
2EG1050	1	Resistenza carter 110 Volt	Cranckase heater 110Volt	Résist. du carter 110V	Olsumpfheizung 110Volt	
2EG1070	1	Resistenza carter 48 Volt	Cranckase heater 48Volt	Résist. du carter 48V	Olsumpfheizung 48Volt	
2EG1080	1	Resistenza carter 24 Volt	Cranckase heater 24Volt	Résist. du carter 24V	Olsumpfheizung 24Volt	
1LCN013	1	Kit iniezione di liq. D.T.C. compl.	Compl. liq. inj. device D.T.C.	Kit D.T.C. compl.	D.T.C. Bausatz	
1GCM010	1	Valvola di iniezione liquido	Solenoid valve for D.T.C. system	Disp. d'inj. D.T.C.	Magnet-Expansionv. D.T.C.	
2CE1040	1	Sonda di temperatura per D.T.C.	Temp. sensor for D.T.C.	Sonde de temp. D.T.C.	Temperat. D.T.C.	
2CE3010	1	Scheda elettronica per D.T.C.	Electronic module for D.T.C.	D.T.C. Module	D.T.C. Modul	

DORIN	M/COMPRESSORE M/COMPRESSORS M/COMPRESSEURS MOTORKOMPRESS.	K400CS	02/02/2004 N° EM0194	REV. 03

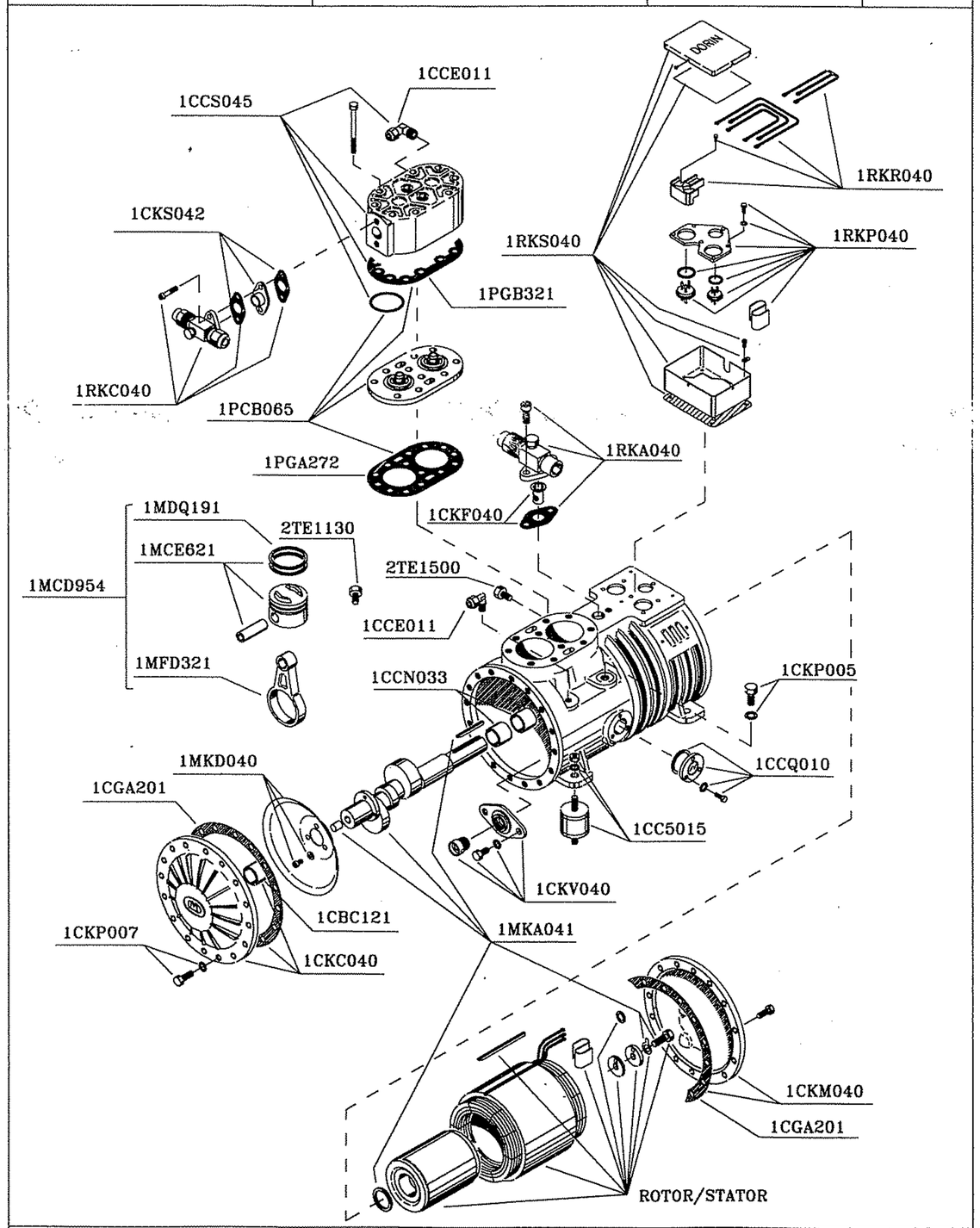

ACCESSORI – ACCESSORIES – ACCESSOIRES – ZUBEHORTEILE

GASKET SET	1CCM085
WATER COOLER HEAD	1CCT025
AUXILIARI HEAD FAN	1ACS380

CRANKASE HEATER	
VOLT	CODE
220	2EG2020
110	2EG1050
48	2EG1070
24	2EG1080

LIQUID INJECTION DEVICE D.T.C.	
COMPLETE SET	1LCN013
VALVE	1GCM010
ELECTRONIC MODULE	2CE3010
TEMP. SENSOR	2CE1040

SUPPLY	ROTOR/STATOR CODE
220-380/3/50	1RKK040
220-380/3/60	1RKK048
200/3/60	1RKK048
200/3/50-60	1RKK048
380△/3/50	1RKL035

DEMO

DORIN	M/COMPRESSORE M/COMPRESSORS M/COMPRESSEURS MOTORKOMPRESS.	K400CS	02/02/2004 N° EM0194	REV. 03

Code	Qty	Descrizione	Description	Désignation	Benennung	Mass Kg.
1CBC121	1	Bronzina coperchio	Cover Bearing	Coussinet	Lagerbuchse	
1CCE011	1	Presa manometrica 1/4 SAE	Pressure connection 1/4 SAE	Raccord 1/4 SAE	Anschluss 1/4SAE	
1CCE011	1	Presa manometrica 1/4 SAE	Pressure connection 1/4 SAE	Raccord 1/4 SAE	Anschluss 1/4SAE	
1CC5015	1	Kit Sospensioni compl.	Vibration damper Kit complete	Amortisseur de vibr. compl.	Dampfungselement kom.	
1CCN033	1	Bronzina centrale	Main Bearing	Coussinet (carter)	Lagerbuchse	
1CCQ010	1	Spia olio completa	Oil sight glass	Voyant du huile	Schauglas	
1CCS045	1	Testa ad aria completa	Air-cooled head	Culasse à air conpl.	Zylinderkopf luft. Kompl.	
1CGA201	1	Guarn. coperchio motore	Motor cover gasket	Joint	Dichtung	
1CGA201	1	Guarnizione coperchio cil.	Cyl. cover gasket	Joint, carter/couv.cylindre	Dichtung,Geh./Zylind.	
1CKC040	1	Coperchio cilindri	Cylinder cover	Couvert cylindre	Zylinderdeckel	
1CKF040	1	Filtro di aspirazione	Suction filter and gasket	Filtre d'aspiration	Sauggasfilter	
1CKM040	1	Coperchio motore	Electr.motor cover	Couver (cotè motor)	Motordeckel	
1CKP005	1	Tappo Carica olio	Screws for oil service	Bouchon pour huile	Schraube	
1CKP007	1	Tappo Scarica olio	Screws for oil service	Bouchon pour huile	Schraube	
1CKS042	1	Trafilatore di mandata compl.	Pulsation red. flange	Plaque de Silencieux	Geräuschdämpf	
1CKV040	1	Valvola ritegno olio compl.	Oil check valve compl.	Clap. Ret. Huile	Öldrucksschlagren	
1MCD954	2	Kit Biella-Pistone	Conn. rod/ piston compl.	Bielle/Piston compl.	Pleul/Kolben	
1MCE621	2	Pistone completo	Piston complete	Piston compl.	Kolben kompl.	
1MKD040	1	Disco sbattiolio	Oil centrifugal disk	Disque huile	Discheibe	
1MDQ191	4	Segmenti	Rings	Segment étanchèité	Rechteckring	
1MFD321	2	Biella	Connecting rod	Bielle	Pleul	
1MKA041	1	Albero completo	Complete Shaft	Vilebbrequin compl.	Kurbelwelle einsch.	
1PCB065	1	Piastra valvole completa	Complete valve plate	Plaque à clapets compl.	Ventilplatte kompl.	
1PGA272	1	Guarnizione P.Valvole-Carter	Valve plate-Carter gasket	Joint,Corps/Plaque a cl.	Dichtung,Geh./Ventilpl.	
1PGB321	1	Guarnizione Testa-P.Valvole	Air head-Valve plate gasket	Joint,Culasse/Plaque cl.	Dichtung, Z.kopf/Ventilpl.	
1RKA040	1	Rubinetto di aspir. D28S	Suction service valve D28S	Vanne d'aspiration D28S	Saugabsperrventil D28S.	
1RKC040	1	Rubinetto di mandata.D16S	Discharge service valve D16S	Vanne de refoul. D16S	Druckabsperrventil D16S	
1RKK040	1	Roto-statore 220/380/3/50	Stator-rotor 220/380/3/50	Stator-rotor 220/380/3/50	Stator-rotor 220/380/3/50	
1RKK048	(1)	Roto-statore 220/380/3/60	Stator-rotor 220/380/3/60	Stator-rotor 220/380/3/60	Stator-rotor 220/380/3/60	
1RKL035	(1)	Roto-statore 380/3/50 Triang.	Stator-rotor 380/3/50 DELTA	Stator-rotor 380/3/50 DELTA	Stator-rotor 380/3/50 DELTA	
1RKP040	1	Insieme passanti elettrici compl.	Electr.Terminals plate	Plaque à bornes compl.	Stromdurch.platte kompl.	
1RKR040	1	Insieme terminali elettrici compl.	Electr. blocks Kit	Passant	Durchgang	
1RKS040	1	Scatola attacchi elettrici	Complete electrical terminal box	Boite à bornes compl.	Anschl. kompl.	
2TE1130	1	Tappo	Screws	Bouchon	Schraube	
2TE1500	1	Tappo	Screws	Bouchon	Schraube	
			Accessori / Accessories / Accessoires / Zubehorteile			
1ACS380	1	Ventilatore ausiliario	Auxiliary head fan	Ventilateur Add	Zusatzlufter	
1CCM085	1	Serie completa guarnizioni	Complete gasket set	Jeu de joints	Dichtungssatz	
1CCT025	1	Testa raffreddata ad acqua	Water-cooled head	Culasse refr. par eau	Zylinderkopf ,wasserg.	
2EG2020	1	Resistenza carter 220 Volt	Cranckase heater 220Volt	Résist. du carter 220V	Olsumpfheizung 220Volt	
2EG1050	1	Resistenza carter 110 Volt	Cranckase heater 110Volt	Résist. du carter 110V	Olsumpfheizung 110Volt	
2EG1070	1	Resistenza carter 48 Volt	Cranckase heater 48Volt	Résist. du carter 48V	Olsumpfheizung 48Volt	
2EG1080	1	Resistenza carter 24 Volt	Cranckase heater 24Volt	Résist. du carter 24V	Olsumpfheizung 24Volt	
1LCN013	1	Kit iniezione di liq. D.T.C. compl.	Compl. liq. inj. device D.T.C.	Kit D.T.C. compl.	D.T.C. Bausatz	
1GCM010	1	Valvola di iniezione liquido	Solenoid valve for D.T.C. system	Disp. d'inj. D.T.C.	Magnet-Expansionv. D.T.C.	
2CE1040	1	Sonda di temperatura per D.T.C.	Temp. sensor for D.T.C.	Sonde de temp. D.T.C.	Temperat. D.T.C.	
2CE3010	1	Scheda elettronica per D.T.C.	Electronic module for D.T.C.	D.T.C. Module	D.T.C. Modul	

DORIN	M/COMPRESSORE M/COMPRESSORS M/COMPRESSEURS MOTORKOMPRESS	K470CC	10/05/1999 N° EM0195	REV. 02

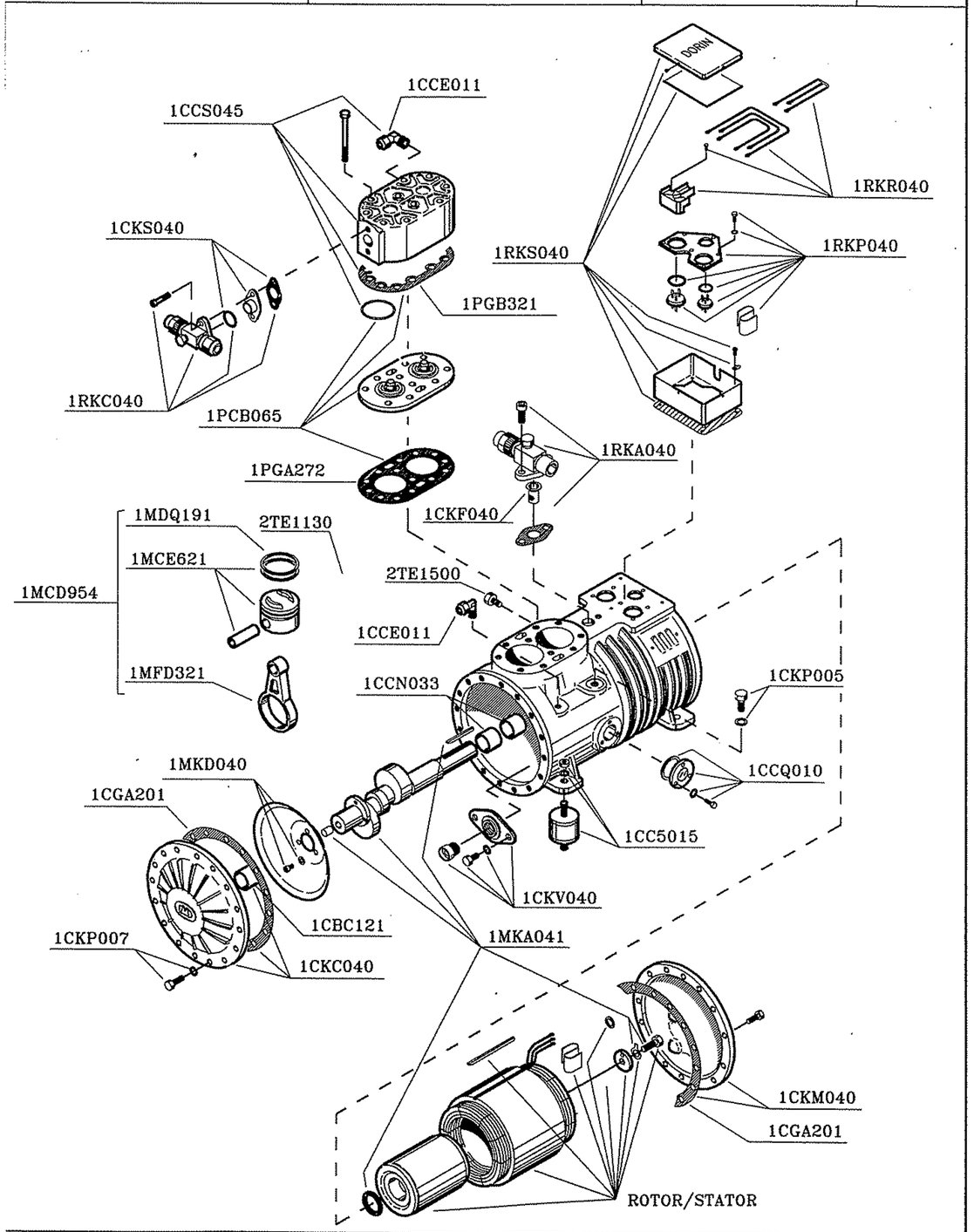

ACCESSORI – ACCESSORIES – ACCESSOIRES – ZUBEHORTEILE

GASKET SET	1CCM085
WATER COOLER HEAD	1CCT025
AUXILIARI HEAD FAN	1ACS380

CRANKASE HEATER	
VOLT	CODE
220	2EG2020
110	2EG1050
48	2EG1070
24	2EG1080

LIQUID INJECTION DEVICE D.T.C.	
COMPLETE SET	1LCN013
VALVE	1GCM010
ELECTRONIC MODULE	2CE3010
TEMP. SENSOR	2CE1040

SUPPLY	ROTOR/STATOR CODE
220–380/3/50	1RKK041
220–380/3/60	1RKK049
200/3/60	1RKK049
200/3/50–60	1RKK049
380△/3/50	1RKL036

DEMO

DORIN	M/COMPRESSORE M/COMPRESSORS M/COMPRESSEURS MOTORKOMPRESS.	K470CC	03/11/98 N° EM0195	REV. 02

Code	Qty	Descrizione	Description	Désignation	Benennung	Mass Kg.
1CBC121	1	Bronzina coperchio	Cover Bearing	Coussinet	Lagerbuchse	
1CCE011	1	Presa manometrica 1/4 SAE	Pressure connection 1/4 SAE	Raccord 1/4 SAE	Anschluss 1/4SAE	
1CCE011	1	Presa manometrica 1/4 SAE	Pressure connection 1/4 SAE	Raccord 1/4 SAE	Anschluss 1/4SAE	
1CC5015	1	Kit Sospensioni compl.	Vibration damper Kit complete	Amortisseur de vibr. compl.	Dampfungselement kom.	
1CCN033	1	Bronzina centrale	Main Bearing	Coussinet (carter)	Lagerbuchse	
1CCQ010	1	Spia olio completa	Oil sight glass	Voyant du huile	Schauglas	
1CCS045	1	Testa ad aria completa	Air-cooled head	Culasse à air conpl.	Zylinderkopf luft. Kompl.	
1CGA201	1	Guarn. coperchio motore	Motor cover gasket	Joint	Dichtung	
1CGA201	1	Guarnizione coperchio cil.	Cyl. cover gasket	Joint, carter/couv.cylindre	Dichtung,Geh./Zylind.	
1CKC040	1	Coperchio cilindri	Cylinder cover	Couvert cylindre	Zylinderdeckel	
1CKF040	1	Filtro di aspirazione	Suction filter and gasket	Filtre d'aspiration	Sauggasfilter	
1CKM040	1	Coperchio motore	Electr.motor cover	Couver (cotè motor)	Motordeckel	
1CKP005	1	Tappo Carica olio	Screws for oil service	Bouchon pour huile	Schraube	
1CKP007	1	Tappo Scarica olio	Screws for oil service	Bouchon pour huile	Schraube	
1CKS040	1	Trafilatore di mandata compl.	Pulsation red. flange	Plaque de Silencieux	Geräuschdämpf	
1CKV040	1	Valvola ritegno olio compl.	Oil check valve compl.	Clap. Ret. Huile	Öldrucksschlagren	
1MCD954	2	Kit Biella-Pistone	Conn. rod/ piston compl.	Bielle/Piston compl.	Pleul/Kolben	
1MCE621	2	Pistone completo	Piston complete	Piston compl.	Kolben kompl.	
1MKD040	1	Disco sbattiolio	Oil centrifugal disk	Disque huile	Discheibe	
1MDQ191	4	Segmenti	Rings	Segment étanchéité	Rechteckring	
1MFD321	2	Biella	Connecting rod	Bielle	Pleul	
1MKA041	1	Albero completo	Complete Shaft	Vilebbrequin compl.	Kurbelwelle einsch.	
1PCB065	1	Piastra valvole completa	Complete valve plate	Plaque à clapets compl.	Ventilplatte kompl.	
1PGA272	1	Guarnizione P.Valvole-Carter	Valve plate-Carter gasket	Joint,Corps/Plaque a cl.	Dichtung,Geh./Ventilpl.	
1PGB321	1	Guarnizione Testa-P.Valvole	Air head-Valve plate gasket	Joint,Culasse/Plaque cl.	Dichtung, Z.kopf/Ventilpl.	
1RKA040	1	Rubinetto di aspir. D28S	Suction service valve D28S	Vanne d'aspiration D28S	Saugabsperrventil D28S.	
1RKC040	1	Rubinetto di mandata.D16S	Discharge service valve D16S	Vanne de refoul. D16S	Druckabsperrventil D16S	
1RKK041	1	Roto-statore 220/380/3/50	Stator-rotor 220/380/3/50	Stator-rotor 220/380/3/50	Stator-rotor 220/380/3/50	
1RKK049	(1)	Roto-statore 220/380/3/60	Stator-rotor 220/380/3/60	Stator-rotor 220/380/3/60	Stator-rotor 220/380/3/60	
1RKL036	(1)	Roto-statore 380/3/50 Triang.	Stator-rotor 380/3/50 DELTA	Stator-rotor 380/3/50 DELTA	Stator-rotor 380/3/50 DELTA	
1RKP040	1	Insieme passanti elettrici compl.	Electr.Terminals plate	Plaque à bornes compl.	Stromdurch.platte kompl.	
1RKR040	1	Insieme terminali elettrici compl.	Electr. blocks Kit	Passant	Durchgang	
1RKS040	1	Scatola attacchi elettrici	Complete electrical terminal box	Boite à bornes compl.	Anschl. kompl.	
2TE1130	1	Tappo	Screws	Bouchon	Schraube	
2TE1500	1	Tappo	Screws	Bouchon	Schraube	
			Accessori / Accessories / Accessoires / Zubehorteile			
1ACS380	1	Ventilatore ausiliario	Auxiliary head fan	Ventilateur Add	Zusatzlufter	
1CCM085	1	Serie completa guarnizioni	Complete gasket set	Jeu de joints	Dichtungssatz	
1CCT025	1	Testa raffreddata ad acqua	Water-cooled head	Culasse refr. par eau	Zylinderkopf ,wasserg.	
2EG2020	1	Resistenza carter 220 Volt	Cranckase heater 220Volt	Résist. du carter 220V	Olsumpfheizung 220Volt	
2EG1050	1	Resistenza carter 110 Volt	Cranckase heater 110Volt	Résist. du carter 110V	Olsumpfheizung 110Volt	
2EG1070	1	Resistenza carter 48 Volt	Cranckase heater 48Volt	Résist. du carter 48V	Olsumpfheizung 48Volt	
2EG1080	1	Resistenza carter 24 Volt	Cranckase heater 24Volt	Résist. du carter 24V	Olsumpfheizung 24Volt	
1LCN013	1	Kit iniezione di liq. D.T.C. compl.	Compl. liq. inj. device D.T.C.	Kit D.T.C. compl.	D.T.C. Bausatz	
1GCM010	1	Valvola di iniezione liquido	Solenoid valve for D.T.C. system	Disp. d'inj. D.T.C.	Magnet-Expansionv. D.T.C.	
2CE1040	1	Sonda di temperatura per D.T.C.	Temp. sensor for D.T.C.	Sonde de temp. D.T.C.	Temperat. D.T.C.	
2CE3010	1	Scheda elettronica per D.T.C.	Electronic module for D.T.C.	D.T.C. Module	D.T.C. Modul	

DORIN	M/COMPRESSORE M/COMPRESSORS M/COMPRESSEURS MOTORKOMPRESS.	K470CS	02/02/2004 N° EM0196	REV. 03

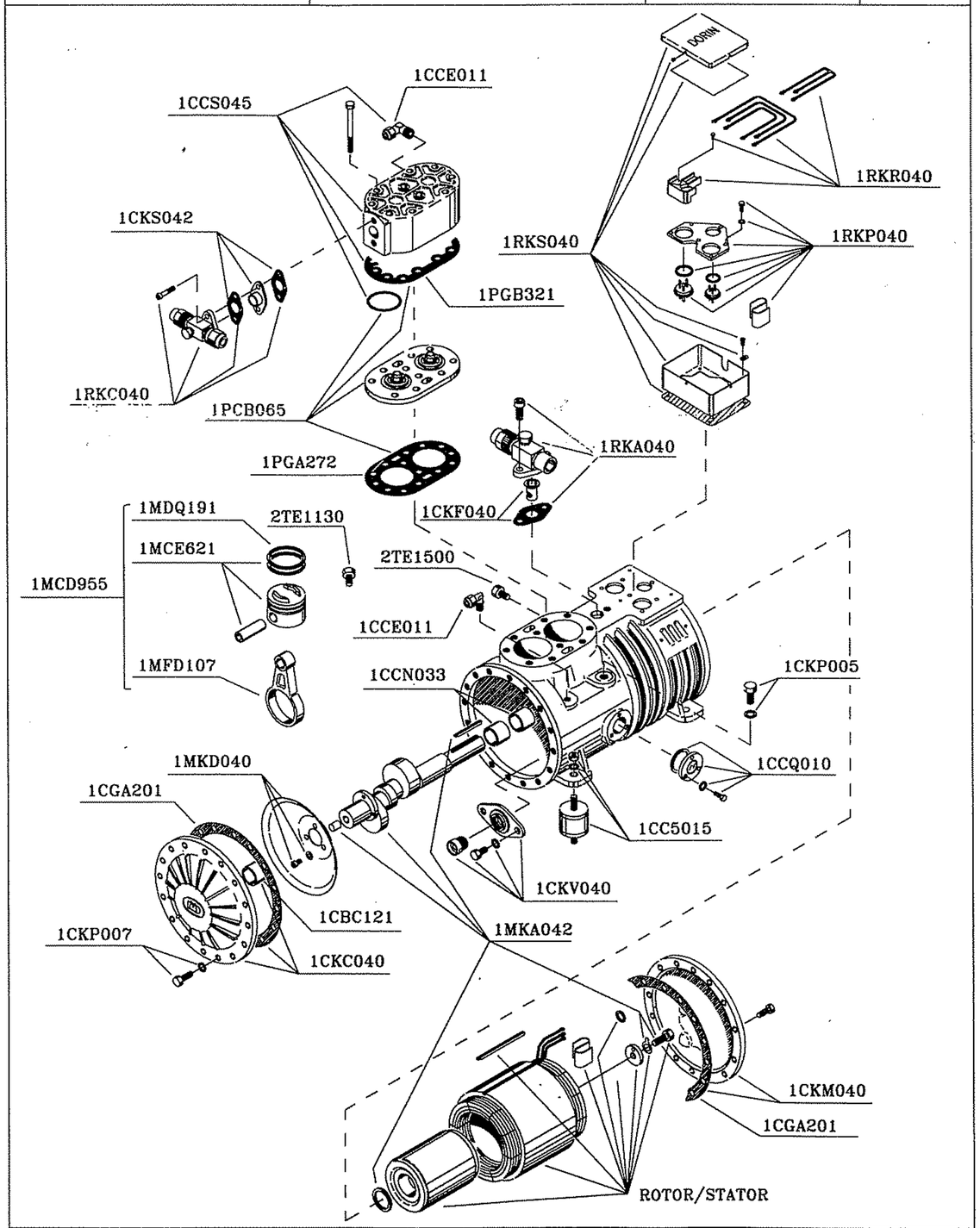

ACCESSORI – ACCESSORIES – ACCESSOIRES – ZUBEHORTEILE

GASKET SET	1CCM085
WATER COOLER HEAD	1CCT025
AUXILIARI HEAD FAN	1ACS380

CRANKASE HEATER	
VOLT	CODE
220	2EG2020
110	2EG1050
48	2EG1070
24	2EG1080

LIQUID INJECTION DEVICE D.T.C.	
COMPLETE SET	1LCN013
VALVE	1GCM010
ELECTRONIC MODULE	2CE3010
TEMP. SENSOR	2CE1040

SUPPLY	ROTOR/STATOR CODE
220-380/3/50	1RKK041
220-380/3/60	1RKK049
200/3/60	1RKK049
200/3/50-60	1RKK049
380△/3/50	1RKL036

DEMO

DORIN	M/COMPRESSORE M/COMPRESSORS M/COMPRESSEURS MOTORKOMPRESS.	K470CS	02/02/2004 N° EM0196	REV. 03

Code	Qty	Descrizione	Description	Désignation	Benennung	Mass Kg.
1CBC121	1	Bronzina coperchio	Cover Bearing	Coussinet	Lagerbuchse	
1CCE011	1	Presa manometrica 1/4 SAE	Pressure connection 1/4 SAE	Raccord 1/4 SAE	Anschluss 1/4SAE	
1CCE011	1	Presa manometrica 1/4 SAE	Pressure connection 1/4 SAE	Raccord 1/4 SAE	Anschluss 1/4SAE	
1CC5015	1	Kit Sospensioni compl.	Vibration damper Kit complete	Amortisseur de vibr. compl.	Dampfungselement kom.	
1CCN033	1	Bronzina centrale	Main Bearing	Coussinet (carter)	Lagerbuchse	
1CCQ010	1	Spia olio completa	Oil sight glass	Voyant du huile	Schauglas	
1CCS045	1	Testa ad aria completa	Air-cooled head	Culasse à air conpl.	Zylinderkopf luft. Kompl.	
1CGA201	1	Guarn. coperchio motore	Motor cover gasket	Joint	Dichtung	
1CGA201	1	Guarnizione coperchio cil.	Cyl. cover gasket	Joint, carter/couv.cylindre	Dichtung,Geh./Zylind.	
1CKC040	1	Coperchio cilindri	Cylinder cover	Couvert cylindre	Zylinderdeckel	
1CKF040	1	Filtro di aspirazione	Suction filter and gasket	Filtre d'aspiration	Sauggasfilter	
1CKM040	1	Coperchio motore	Electr.motor cover	Couver (cotè motor)	Motordeckel	
1CKP005	1	Tappo Carica olio	Screws for oil service	Bouchon pour huile	Schraube	
1CKP007	1	Tappo Scarica olio	Screws for oil service	Bouchon pour huile	Schraube	
1CKS042	1	Trafilatore di mandata compl.	Pulsation red. flange	Plaque de Silencieux	Geräuschdämpf	
1CKV040	1	Valvola ritegno olio compl.	Oil check valve compl.	Clap. Ret. Huile	Öldrucksschlagren	
1MCD955	2	Kit Biella-Pistone	Conn. rod/ piston compl.	Bielle/Piston compl.	Pleul/Kolben	
1MCE621	2	Pistone completo	Piston complete	Piston compl.	Kolben kompl.	
1MKD040	1	Disco sbattiolio	Oil centrifugal disk	Disque huile	Dischelbe	
1MDQ191	4	Segmenti	Rings	Segment étanchèité	Rechteckring	
1MFD107	2	Biella	Connecting rod	Bielle	Pleul	
1MKA042	1	Albero completo	Complete Shaft	Vilebbrequin compl.	Kurbelwelle einsch.	
1PCB065	1	Piastra valvole completa	Complete valve plate	Plaque à clapets compl.	Ventilplatte kompl.	
1PGA272	1	Guarnizione P.Valvole-Carter	Valve plate-Carter gasket	Joint,Corps/Plaque a cl.	Dichtung,Geh./Ventilpl.	
1PGB321	1	Guarnizione Testa-P.Valvole	Air head-Valve plate gasket	Joint,Culasse/Plaque cl.	Dichtung, Z.kopf/Ventilpl.	
1RKA040	1	Rubinetto di aspir. D28S	Suction service valve D28S	Vanne d'aspiration D28S	Saugabsperrventil D28S.	
1RKC040	1	Rubinetto di mandata.D16S	Discharge service valve D16S	Vanne de refoul. D16S	Druckabsperrventil D16S	
1RKK041	1	Roto-statore 220/380/3/50	Stator-rotor 220/380/3/50	Stator-rotor 220/380/3/50	Stator-rotor 220/380/3/50	
1RKK049	(1)	Roto-statore 220/380/3/60	Stator-rotor 220/380/3/60	Stator-rotor 220/380/3/60	Stator-rotor 220/380/3/60	
1RKL036	(1)	Roto-statore 380/3/50 Triang.	Stator-rotor 380/3/50 DELTA	Stator-rotor 380/3/50 DELTA	Stator-rotor 380/3/50 DELTA	
1RKP040	1	Insieme passanti elettrici compl.	Electr.Terminals plate	Plaque à bornes compl.	Stromdurch.platte kompl.	
1RKR040	1	Insieme terminali elettrici compl.	Electr. blocks Kit	Passant	Durchgang	
1RKS040	1	Scatola attacchi elettrici	Complete electrical terminal box	Boite à bornes compl.	Anschl. kompl.	
2TE1130	1	Tappo	Screws	Bouchon	Schraube	
2TE1500	1	Tappo	Screws	Bouchon	Schraube	
			Accessori / Accessories / Accessoires / Zubehorteile			
1ACS380	1	Ventilatore ausiliario	Auxiliary head fan	Ventilateur Add	Zusatzlufter	
1CCM085	1	Serie completa guarnizioni	Complete gasket set	Jeu de joints	Dichtungssatz	
1CCT025	1	Testa raffreddata ad acqua	Water-cooled head	Culasse refr. par eau	Zylinderkopf ,wasserg.	
2EG2020	1	Resistenza carter 220 Volt	Cranckase heater 220Volt	Résist. du carter 220V	Olsumpfheizung 220Volt	
2EG1050	1	Resistenza carter 110 Volt	Cranckase heater 110Volt	Résist. du carter 110V	Olsumpfheizung 110Volt	
2EG1070	1	Resistenza carter 48 Volt	Cranckase heater 48Volt	Résist. du carter 48V	Olsumpfheizung 48Volt	
2EG1080	1	Resistenza carter 24 Volt	Cranckase heater 24Volt	Résist. du carter 24V	Olsumpfheizung 24Volt	
1LCN013	1	Kit iniezione di liq. D.T.C. compl.	Compl. liq. inj. device D.T.C.	Kit D.T.C. compl.	D.T.C. Bausatz	
1GCM010	1	Valvola di iniezione liquido	Solenoid valve for D.T.C. system	Disp. d'inj. D.T.C.	Magnet-Expansionv. D.T.C.	
2CE1040	1	Sonda di temperatura per D.T.C.	Temp. sensor for D.T.C.	Sonde de temp. D.T.C.	Temperat. D.T.C.	
2CE3010	1	Scheda elettronica per D.T.C.	Electronic module for D.T.C.	D.T.C. Module	D.T.C. Modul	

DORIN	M/COMPRESSORE M/COMPRESSORS M/COMPRESSEURS MOTORKOMPRESS.	K500CC	10/05/1999 N° EM0197	REV. 02

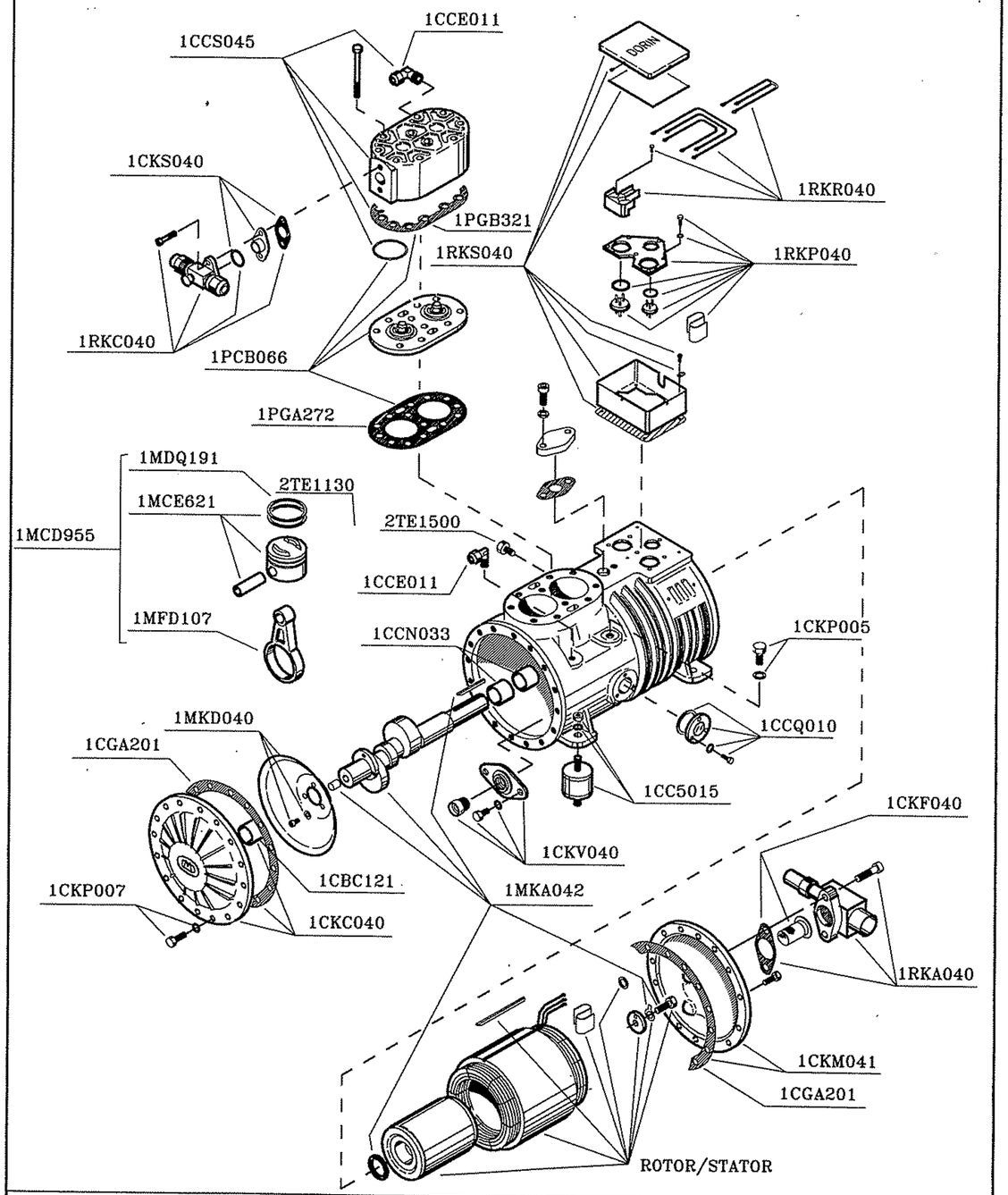

ACCESSORI – ACCESSORIES – ACCESSOIRES – ZUBEHORTEILE

GASKET SET	1CCM085
WATER COOLER HEAD	1CCT025
AUXILIARI HEAD FAN	1ACS380

CRANKASE HEATER	
VOLT	CODE
220	2EG2020
110	2EG1050
48	2EG1070
24	2EG1080

LIQUID INJECTION DEVICE D.T.C.	
COMPLETE SET	1LCN013
VALVE	1GCM010
ELECTRONIC MODULE	2CE3010
TEMP. SENSOR	2CE1040

SUPPLY	ROTOR/STATOR CODE
220–380/3/50	1RKK042
220–380/3/60	1RKK050
200/3/60	1RKK050
200/3/50–60	1RKK050
380△/3/50	1RKL037

DEMO

DORIN	M/COMPRESSORE M/COMPRESSORS M/COMPRESSEURS MOTORKOMPRESS.	K500CC	03/11/98 N° EM0197	REV. 02

Code	Qty	Descrizione	Description	Désignation	Benennung	Mass Kg.
1CBC121	1	Bronzina coperchio	Cover Bearing	Coussinet	Lagerbuchse	
1CCE011	1	Presa manometrica 1/4 SAE	Pressure connection 1/4 SAE	Raccord 1/4 SAE	Anschluss 1/4SAE	
1CCE011	1	Presa manometrica 1/4 SAE	Pressure connection 1/4 SAE	Raccord 1/4 SAE	Anschluss 1/4SAE	
1CC5015	1	Kit Sospensioni compl.	Vibration damper Kit complete	Amortisseur de vibr. compl.	Dampfungselement kom.	
1CCN033	1	Bronzina centrale	Main Bearing	Coussinet (carter)	Lagerbuchse	
1CCQ010	1	Spia olio completa	Oil sight glass	Voyant du huile	Schauglas	
1CCS045	1	Testa ad aria completa	Air-cooled head	Culasse à air conpl.	Zylinderkopf luft. Kompl.	
1CGA201	1	Guarn. coperchio motore	Motor cover gasket	Joint	Dichtung	
1CGA201	1	Guarnizione coperchio cil.	Cyl. cover gasket	Joint, carter/couv.cylindre	Dichtung,Geh./Zylind.	
1CKC040	1	Coperchio cilindri	Cylinder cover	Couvert cylindre	Zylinderdeckel	
1CKF040	1	Filtro di aspirazione	Suction filter and gasket	Filtre d'aspiration	Sauggasfilter	
1CKM041	1	Coperchio motore	Electr.motor cover	Couver (cotè motor)	Motordeckel	
1CKP005	1	Tappo Carica olio	Screws for oil service	Bouchon pour huile	Schraube	
1CKP007	1	Tappo Scarica olio	Screws for oil service	Bouchon pour huile	Schraube	
1CKS040	1	Trafilatore di mandata compl.	Pulsation red. flange	Plaque de Silencieux	Geräuschdämpf	
1CKV040	1	Valvola ritegno olio compl.	Oil check valve compl.	Clap. Ret. Huile	Öldrucksschlagren	
1MCD955	2	Kit Biella-Pistone	Conn. rod/ piston compl.	Bielle/Piston compl.	Pleul/Kolben	
1MCE621	2	Pistone completo	Piston complete	Piston compl.	Kolben kompl.	
1MKD040	1	Disco sbattiolio	Oil centrifugal disk	Disque huile	Discheibe	
1MDQ191	4	Segmenti	Rings	Segment étanchèité	Rechteckring	
1MFD107	2	Biella	Connecting rod	Bielle	Pleul	
1MKA042	1	Albero completo	Complete Shaft	Vilebbrequin compl.	Kurbelwelle einsch.	
1PCB066	1	Piastra valvole completa	Complete valve plate	Plaque à clapets compl.	Ventilplatte kompl.	
1PGA272	1	Guarnizione P.Valvole-Carter	Valve plate-Carter gasket	Joint,Corps/Plaque a cl.	Dichtung,Geh./Ventilpl.	
1PGB321	1	Guarnizione Testa-P.Valvole	Air head-Valve plate gasket	Joint,Culasse/Plaque cl.	Dichtung, Z.kopf/Ventilpl.	
1RKA040	1	Rubinetto di aspir. D28S	Suction service valve D28S	Vanne d'aspiration D28S	Saugabsperrventil D28S.	
1RKC040	1	Rubinetto di mandata.D16S	Discharge service valve D16S	Vanne de refoul. D16S	Druckabsperrventil D16S	
1RKK042	1	Roto-statore 220/380/3/50	Stator-rotor 220/380/3/50	Stator-rotor 220/380/3/50	Stator-rotor 220/380/3/50	
1RKK050	(1)	Roto-statore 220/380/3/60	Stator-rotor 220/380/3/60	Stator-rotor 220/380/3/60	Stator-rotor 220/380/3/60	
1RKL037	(1)	Roto-statore 380/3/50 Triang.	Stator-rotor 380/3/50 DELTA	Stator-rotor 380/3/50 DELTA	Stator-rotor 380/3/50 DELTA	
1RKP040	1	Insieme passanti elettrici compl.	Electr.Terminals plate	Plaque à bornes compl.	Stromdurch.platte kompl.	
1RKR040	1	Insieme terminali elettrici compl.	Electr. blocks Kit	Passant	Durchgang	
1RKS040	1	Scatola attacchi elettrici	Complete electrical terminal box	Boite à bornes compl.	Anschl. kompl.	
2TE1130	1	Tappo	Screws	Bouchon	Schraube	
2TE1500	1	Tappo	Screws	Bouchon	Schraube	
			Accessori / Accessories / Accressoires / Zubehorteile			
1ACS380	1	Ventilatore ausiliario	Auxiliary head fan	Ventilateur Add	Zusatzlufter	
1CCM085	1	Serie completa guamizioni	Complete gasket set	Jeu de joints	Dichtungssatz	
1CCT025	1	Testa raffreddata ad acqua	Water-cooled head	Culasse refr. par eau	Zylinderkopf ,wasserg.	
2EG2020	1	Resistenza carter 220 Volt	Cranckase heater 220Volt	Résist. du carter 220V	Olsumpfheizung 220Volt	
2EG1050	1	Resistenza carter 110 Volt	Cranckase heater 110Volt	Résist. du carter 110V	Olsumpfheizung 110Volt	
2EG1070	1	Resistenza carter 48 Volt	Cranckase heater 48Volt	Résist. du carter 48V	Olsumpfheizung 48Volt	
2EG1080	1	Resistenza carter 24 Volt	Cranckase heater 24Volt	Résist. du carter 24V	Olsumpfheizung 24Volt	
1LCN013	1	Kit iniezione di liq. D.T.C. compl.	Compl. liq. inj. device D.T.C.	Kit D.T.C. compl.	D.T.C. Bausatz	
1GCM010	1	Valvola di iniezione liquido	Solenoid valve for D.T.C. system	Disp. d'inj. D.T.C.	Magnet-Expansionv. D.T.C.	
2CE1040	1	Sonda di temperatura per D.T.C.	Temp. sensor for D.T.C.	Sonde de temp. D.T.C.	Temperat. D.T.C.	
2CE3010	1	Scheda elettronica per D.T.C.	Electronic module for D.T.C.	D.T.C. Module	D.T.C. Modul	

DORIN	M/COMPRESSORE M/COMPRESSORS M/COMPRESSEURS MOTORKOMPRESS.	K500SB	10/05/1999 N° EM0198	REV. 02

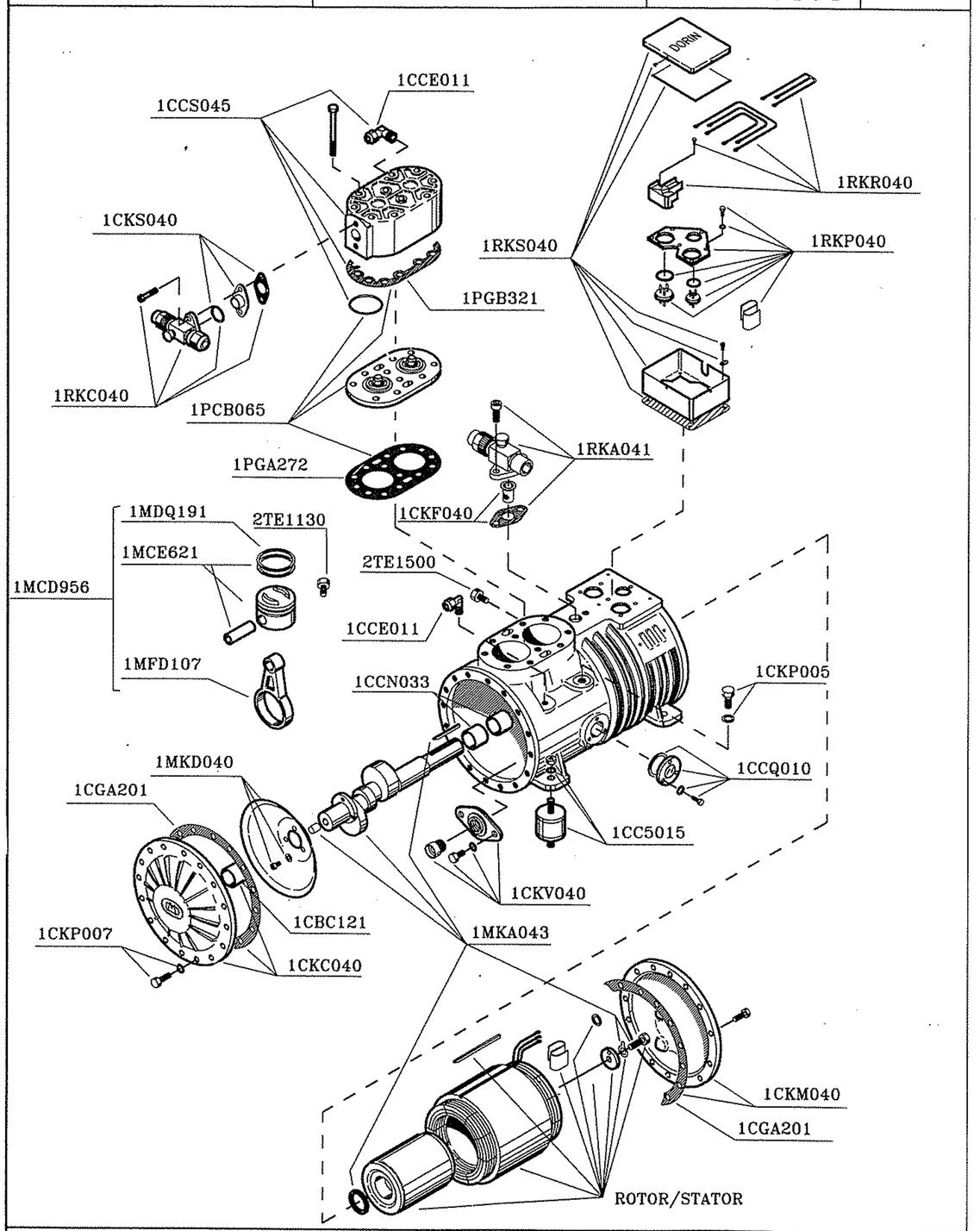

ACCESSORI – ACCESSORIES – ACCESSOIRES – ZUBEHORTEILE

GASKET SET	1CCM085
WATER COOLER HEAD	1CCT025
AUXILIARI HEAD FAN	1ACS380

CRANKASE HEATER	
VOLT	CODE
220	2EG2020
110	2EG1050
48	2EG1070
24	2EG1080

LIQUID INJECTION DEVICE D.T.C.	
COMPLETE SET	1LCN013
VALVE	1GCM010
ELECTRONIC MODULE	2CE3010
TEMP. SENSOR	2CE1040

SUPPLY	ROTOR/STATOR CODE
220–380/3/50	1RKK041
220–380/3/60	1RKK049
200/3/60	1RKK049
200/3/50–60	1RKK049
380△/3/50	1RKL036

DEMO

DORIN	M/COMPRESSORE M/COMPRESSORS M/COMPRESSEURS MOTORKOMPRESS.	K500SB	03/11/98 N° EM0198	REV. 02

Code	Qty	Descrizione	Description	Désignation	Benennung	Mass Kg.
1CBC121	1	Bronzina coperchio	Cover Bearing	Coussinet	Lagerbuchse	
1CCE011	1	Presa manometrica 1/4 SAE	Pressure connection 1/4 SAE	Raccord 1/4 SAE	Anschluss 1/4SAE	
1CCE011	1	Presa manometrica 1/4 SAE	Pressure connection 1/4 SAE	Raccord 1/4 SAE	Anschluss 1/4SAE	
1CC5015	1	Kit Sospensioni compl.	Vibration damper Kit complete	Amortisseur de vibr. compl.	Dampfungselement kom.	
1CCN033	1	Bronzina centrale	Main Bearing	Coussinet (carter)	Lagerbuchse	
1CCQ010	1	Spia olio completa	Oil sight glass	Voyant du huile	Schauglas	
1CCS045	1	Testa ad aria completa	Air-cooled head	Culasse à air conpl.	Zylinderkopf luft. Kompl.	
1CGA201	1	Guarn. coperchio motore	Motor cover gasket	Joint	Dichtung	
1CGA201	1	Guarnizione coperchio cil.	Cyl. cover gasket	Joint, carter/couv.cylindre	Dichtung,Geh./Zylind.	
1CKC040	1	Coperchio cilindri	Cylinder cover	Couvert cylindre	Zylinderdeckel	
1CKF040	1	Filtro di aspirazione	Suction filter and gasket	Filtre d'aspiration	Sauggasfilter	
1CKM040	1	Coperchio motore	Electr.motor cover	Couver (cotè motor)	Motordeckel	
1CKP005	1	Tappo Carica olio	Screws for oil service	Bouchon pour huile	Schraube	
1CKP007	1	Tappo Scarica olio	Screws for oil service	Bouchon pour huile	Schraube	
1CKS040	1	Trafilatore di mandata compl.	Pulsation red. flange	Plaque de Silencieux	Geräuschdämpf	
1CKV040	1	Valvola ritegno olio compl.	Oil check valve compl.	Clap. Ret. Huile	Öldrucksschlagren	
1MCD956	2	Kit Biella-Pistone	Conn. rod/ piston compl.	Bielle/Piston compl.	Pleul/Kolben	
1MCE621	2	Pistone completo	Piston complete	Piston compl.	Kolben kompl.	
1MKD040	1	Disco sbattiolio	Oil centrifugal disk	Disque huile	Discheibe	
1MDQ191	4	Segmenti	Rings	Segment étanchèité	Rechteckring	
1MFD107	2	Biella	Connecting rod	Bielle	Pleul	
1MKA043	1	Albero completo	Complete Shaft	Vilebbrequin compl.	Kurbelwelle einsch.	
1PCB065	1	Piastra valvole completa	Complete valve plate	Plaque à clapets compl.	Ventilplatte kompl.	
1PGA272	1	Guarnizione P.Valvole-Carter	Valve plate-Carter gasket	Joint,Corps/Plaque a cl.	Dichtung,Geh./Ventilpl.	
1PGB321	1	Guarnizione Testa-P.Valvole	Air head-Valve plate gasket	Joint,Culasse/Plaque cl.	Dichtung, Z.kopf/Ventilpl.	
1RKA041	1	Rubinetto di aspir. D35S	Suction service valve D35S	Vanne d'aspiration D35S	Saugabsperrventil D35S.	
1RKC040	1	Rubinetto di mandata.D16S	Discharge service valve D16S	Vanne de refoul. D16S	Druckabsperrventil D16S	
1RKK041	1	Roto-statore 220/380/3/50	Stator-rotor 220/380/3/50	Stator-rotor 220/380/3/50	Stator-rotor 220/380/3/50	
1RKK049	(1)	Roto-statore 220/380/3/60	Stator-rotor 220/380/3/60	Stator-rotor 220/380/3/60	Stator-rotor 220/380/3/60	
1RKL036	(1)	Roto-statore 380/3/50 Triang.	Stator-rotor 380/3/50 DELTA	Stator-rotor 380/3/50 DELTA	Stator-rotor 380/3/50 DELTA	
1RKP040	1	Insieme passanti elettrici compl.	Electr.Terminals plate	Plaque à bornes compl.	Stromdurch.platte kompl.	
1RKR040	1	Insieme terminali elettrici compl.	Electr. blocks Kit	Passant	Durchgang	
1RKS040	1	Scatola attacchi elettrici	Complete electrical terminal box	Boite à bornes compl.	Anschl. kompl.	
2TE1130	1	Tappo	Screws	Bouchon	Schraube	
2TE1500	1	Tappo	Screws	Bouchon	Schraube	
			Accessori / Accessories / Accessoires / Zubehorteile			
1ACS380	1	Ventilatore ausiliario	Auxiliary head fan	Ventilateur Add	Zusatzlufter	
1CCM085	1	Serie completa guarnizioni	Complete gasket set	Jeu de joints	Dichtungssatz	
1CCT025	1	Testa raffreddata ad acqua	Water-cooled head	Culasse refr. par eau	Zylinderkopf ,wasserg.	
2EG2020	1	Resistenza carter 220 Volt	Cranckase heater 220Volt	Résist. du carter 220V	Olsumpfheizung 220Volt	
2EG1050	1	Resistenza carter 110 Volt	Cranckase heater 110Volt	Résist. du carter 110V	Olsumpfheizung 110Volt	
2EG1070	1	Resistenza carter 48 Volt	Cranckase heater 48Volt	Résist. du carter 48V	Olsumpfheizung 48Volt	
2EG1080	1	Resistenza carter 24 Volt	Cranckase heater 24Volt	Résist. du carter 24V	Olsumpfheizung 24Volt	
1LCN013	1	Kit iniezione di liq. D.T.C. compl.	Compl. liq. inj. device D.T.C.	Kit D.T.C. compl.	D.T.C. Bausatz	
1GCM010	1	Valvola di iniezione liquido	Solenoid valve for D.T.C. system	Disp. d'inj. D.T.C.	Magnet-Expansionv. D.T.C.	
2CE1040	1	Sonda di temperatura per D.T.C.	Temp. sensor for D.T.C.	Sonde de temp. D.T.C.	Temperat. D.T.C.	
2CE3010	1	Scheda elettronica per D.T.C.	Electronic module for D.T.C.	D.T.C. Module	D.T.C. Modul	

DORIN	M/COMPRESSORE M/COMPRESSORS M/COMPRESSEURS MOTORKOMPRESS.	K500CS	10/05/1999 N° EM0199	REV. 02

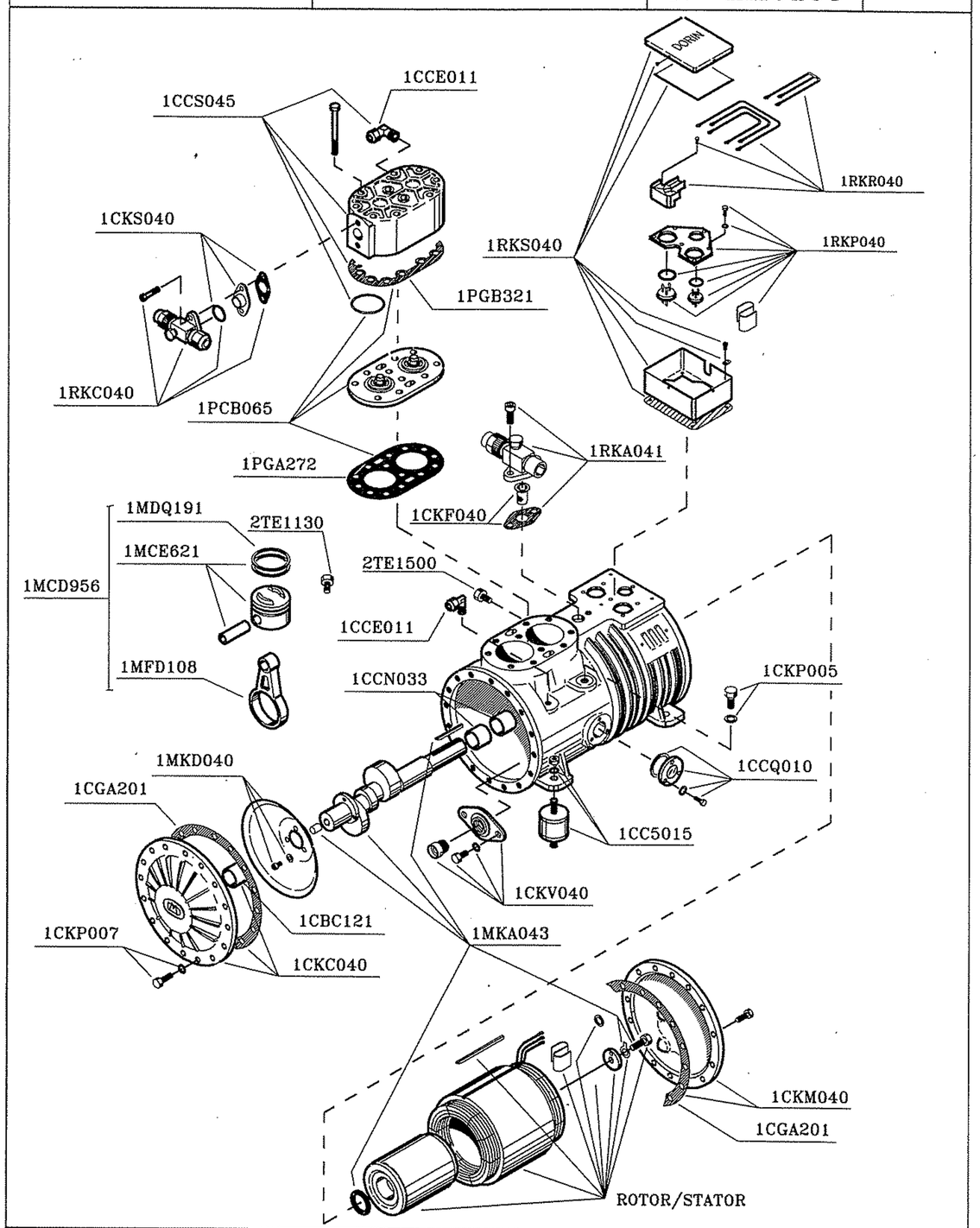

ACCESSORI – ACCESSORIES – ACCESSOIRES – ZUBEHORTEILE

GASKET SET	1CCM085
WATER COOLER HEAD	1CCT025
AUXILIARI HEAD FAN	1ACS380

CRANKASE HEATER	
VOLT	CODE
220	2EG2020
110	2EG1050
48	2EG1070
24	2EG1080

LIQUID INJECTION DEVICE D.T.C.	
COMPLETE SET	1LCN013
VALVE	1GCM010
ELECTRONIC MODULE	2CE3010
TEMP. SENSOR	2CE1040

SUPPLY	ROTOR/STATOR CODE
220–380/3/50	1RKK042
220–380/3/60	1RKK050
200/3/60	1RKK050
200/3/50–60	1RKK050
380△/3/50	1RKL037

DEMO

DORIN	M/COMPRESSORE M/COMPRESSORS M/COMPRESSEURS MOTORKOMPRESS.	K500CS	03/11/98 N° EM0199	REV. 02

Code	Qty	Descrizione	Description	Désignation	Benennung	Mass Kg.
1CBC121	1	Bronzina coperchio	Cover Bearing	Coussinet	Lagerbuchse	
1CCE011	1	Presa manometrica 1/4 SAE	Pressure connection 1/4 SAE	Raccord 1/4 SAE	Anschluss 1/4SAE	
1CCE011	1	Presa manometrica 1/4 SAE	Pressure connection 1/4 SAE	Raccord 1/4 SAE	Anschluss 1/4SAE	
1CC5015	1	Kit Sospensioni compl.	Vibration damper Kit complete	Amortisseur de vibr. compl.	Dampfungselement kom.	
1CCN033	1	Bronzina centrale	Main Bearing	Coussinet (carter)	Lagerbuchse	
1CCQ010	1	Spia olio completa	Oil sight glass	Voyant du huile	Schauglas	
1CCS045	1	Testa ad aria completa	Air-cooled head	Culasse à air compl.	Zylinderkopf luft. Kompl.	
1CGA201	1	Guarn. coperchio motore	Motor cover gasket	Joint	Dichtung	
1CGA201	1	Guarnizione coperchio cil.	Cyl. cover gasket	Joint, carter/couv.cylindre	Dichtung,Geh./Zylind.	
1CKC040	1	Coperchio cilindri	Cylinder cover	Couvert cylindre	Zylinderdeckel	
1CKF040	1	Filtro di aspirazione	Suction filter and gasket	Filtre d'aspiration	Sauggasfilter	
1CKM040	1	Coperchio motore	Electr.motor cover	Couver (cotè motor)	Motordeckel	
1CKP005	1	Tappo Carica olio	Screws for oil service	Bouchon pour huile	Schraube	
1CKP007	1	Tappo Scarica olio	Screws for oil service	Bouchon pour huile	Schraube	
1CKS040	1	Trafilatore di mandata compl.	Pulsation red. flange	Plaque de Silencieux	Geräuschdämpf	
1CKV040	1	Valvola ritegno olio compl.	Oil check valve compl.	Clap. Ret. Huile	Öldrucksschlagren	
1MCD956	2	Kit Biella-Pistone	Conn. rod/ piston compl.	Bielle/Piston compl.	Pleul/Kolben	
1MCE621	2	Pistone completo	Piston complete	Piston compl.	Kolben kompl.	
1MKD040	1	Disco sbattiolio	Oil centrifugal disk	Disque huile	Discheibe	
1MDQ191	4	Segmenti	Rings	Segment étanchèité	Rechteckring	
1MFD108	2	Biella	Connecting rod	Bielle	Pleul	
1MKA043	1	Albero completo	Complete Shaft	Vilebbrequin compl.	Kurbelwelle einsch.	
1PCB065	1	Piastra valvole completa	Complete valve plate	Plaque à clapets compl.	Ventilplatte kompl.	
1PGA272	1	Guarnizione P.Valvole-Carter	Valve plate-Carter gasket	Joint,Corps/Plaque a cl.	Dichtung,Geh./Ventilpl.	
1PGB321	1	Guarnizione Testa-P.Valvole	Air head-Valve plate gasket	Joint,Culasse/Plaque cl.	Dichtung, Z.kopf/Ventilpl.	
1RKA041	1	Rubinetto di aspir. D35S	Suction service valve D35S	Vanne d'aspiration D35S	Saugabsperrventil D35S.	
1RKC040	1	Rubinetto di mandata.D16S	Discharge service valve D16S	Vanne de refoul. D16S	Druckabsperrventil D16S	
1RKK042	1	Roto-statore 220/380/3/50	Stator-rotor 220/380/3/50	Stator-rotor 220/380/3/50	Stator-rotor 220/380/3/50	
1RKK050	(1)	Roto-statore 220/380/3/60	Stator-rotor 220/380/3/60	Stator-rotor 220/380/3/60	Stator-rotor 220/380/3/60	
1RKL037	(1)	Roto-statore 380/3/50 Triang.	Stator-rotor 380/3/50 DELTA	Stator-rotor 380/3/50 DELTA	Stator-rotor 380/3/50 DELTA	
1RKP040	1	Insieme passanti elettrici compl.	Electr.Terminals plate	Plaque à bornes compl.	Stromdurch.platte kompl.	
1RKR040	1	Insieme terminali elettrici compl.	Electr. blocks Kit	Passant	Durchgang	
1RKS040	1	Scatola attacchi elettrici	Complete electrical terminal box	Boite à bornes compl.	Anschl. kompl.	
2TE1130	1	Tappo	Screws	Bouchon	Schraube	
2TE1500	1	Tappo	Screws	Bouchon	Schraube	
			Accessori / Accessories / Accessoires / Zubehorteile			
1ACS380	1	Ventilatore ausiliario	Auxiliary head fan	Ventilateur Add	Zusatzlufter	
1CCM085	1	Serie completa guarnizioni	Complete gasket set	Jeu de joints	Dichtungssatz	
1CCT025	1	Testa raffreddata ad acqua	Water-cooled head	Culasse refr. par eau	Zylinderkopf ,wasserg.	
2EG2020	1	Resistenza carter 220 Volt	Cranckase heater 220Volt	Résist. du carter 220V	Olsumpfheizung 220Volt	
2EG1050	1	Resistenza carter 110 Volt	Cranckase heater 110Volt	Résist. du carter 110V	Olsumpfheizung 110Volt	
2EG1070	1	Resistenza carter 48 Volt	Cranckase heater 48Volt	Résist. du carter 48V	Olsumpfheizung 48Volt	
2EG1080	1	Resistenza carter 24 Volt	Cranckase heater 24Volt	Résist. du carter 24V	Olsumpfheizung 24Volt	
1LCN013	1	Kit iniezione di liq. D.T.C. compl.	Compl. liq. inj. device D.T.C.	Kit D.T.C. compl.	D.T.C. Bausatz	
1GCM010	1	Valvola di iniezione liquido	Solenoid valve for D.T.C. system	Disp. d'inj. D.T.C.	Magnet-Expansionv. D.T.C.	
2CE1040	1	Sonda di temperatura per D.T.C.	Temp. sensor for D.T.C.	Sonde de temp. D.T.C.	Temperat. D.T.C.	
2CE3010	1	Scheda elettronica per D.T.C.	Electronic module for D.T.C.	D.T.C. Module	D.T.C. Modul	

DORIN	M/COMPRESSORE M/COMPRESSORS M/COMPRESSEURS MOTORKOMPRESS.	K740CC	10/05/1999 N° EM0200	REV. 02

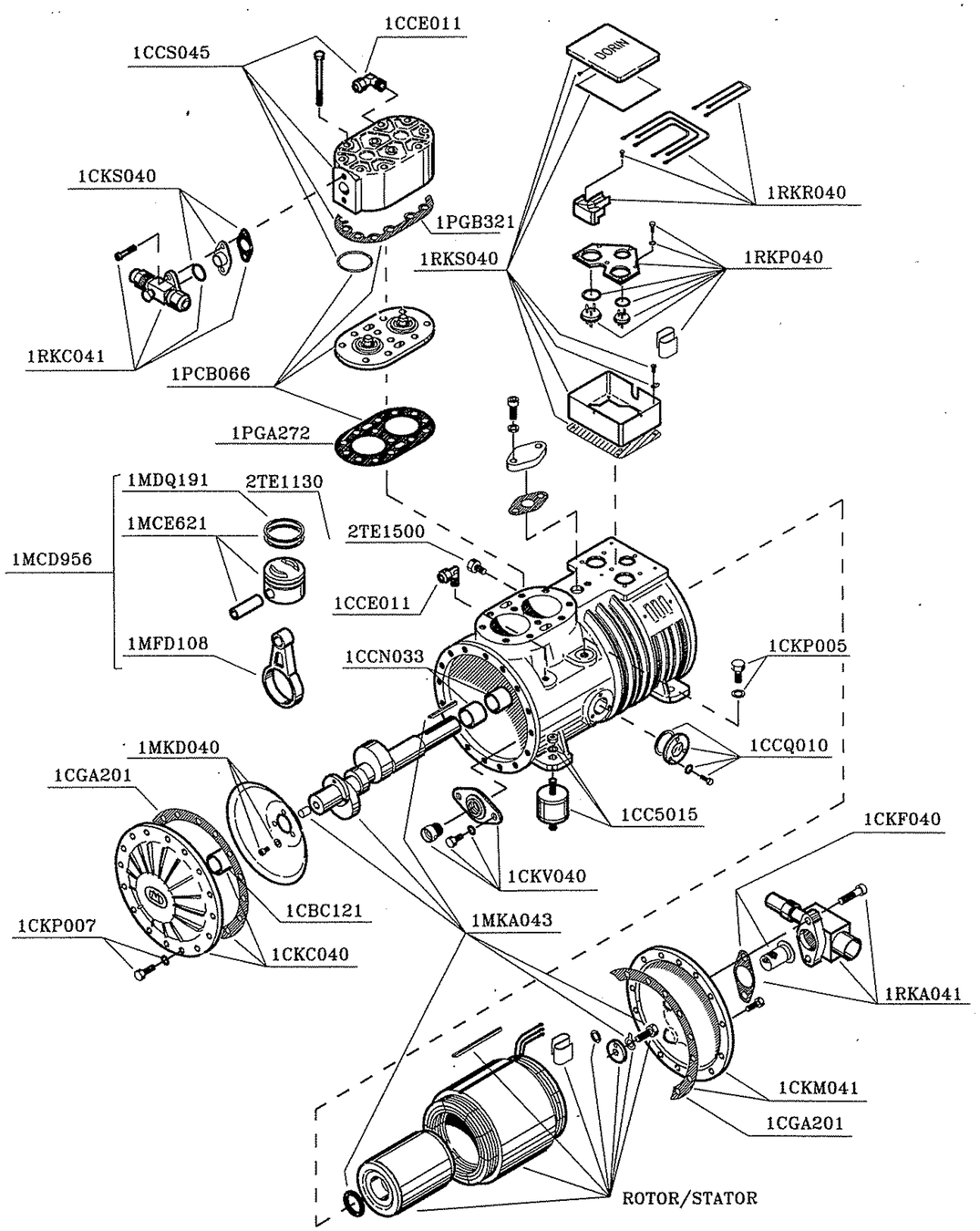

ACCESSORI – ACCESSORIES – ACCESSOIRES – ZUBEHORTEILE

GASKET SET	1CCM085
WATER COOLER HEAD	1CCT025
AUXILIARI HEAD FAN	1ACS380

CRANKASE HEATER	
VOLT	CODE
220	2EG2020
110	2EG1050
48	2EG1070
24	2EG1080

LIQUID INJECTION DEVICE D.T.C.	
COMPLETE SET	1LCN013
VALVE	1GCM010
ELECTRONIC MODULE	2CE3010
TEMP. SENSOR	2CE1040

SUPPLY	ROTOR/STATOR CODE
220–380/3/50	1RKK042
220–380/3/60	1RKK050
200/3/60	1RKK050
200/3/50–60	1RKK050
380△/3/50	1RKL037

DEMO

DORIN	M/COMPRESSORE M/COMPRESSORS M/COMPRESSEURS MOTORKOMPRESS.	K740CC	03/11/98 N° EM0200	REV. 02

Code	Qty	Descrizione	Description	Désignation	Benennung	Mass Kg.
1CBC121	1	Bronzina coperchio	Cover Bearing	Coussinet	Lagerbuchse	
1CCE011	1	Presa manometrica 1/4 SAE	Pressure connection 1/4 SAE	Raccord 1/4 SAE	Anschluss 1/4SAE	
1CCE011	1	Presa manometrica 1/4 SAE	Pressure connection 1/4 SAE	Raccord 1/4 SAE	Anschluss 1/4SAE	
1CC5015	1	Kit Sospensioni compl.	Vibration damper Kit complete	Amortisseur de vibr. compl.	Dampfungselement kom.	
1CCN033	1	Bronzina centrale	Main Bearing	Coussinet (carter)	Lagerbuchse	
1CCQ010	1	Spia olio completa	Oil sight glass	Voyant du huile	Schauglas	
1CCS045	1	Testa ad aria completa	Air-cooled head	Culasse à air conpl.	Zylinderkopf luft. Kompl.	
1CGA201	1	Guarn. coperchio motore	Motor cover gasket	Joint	Dichtung	
1CGA201	1	Guarnizione coperchio cil.	Cyl. cover gasket	Joint, carter/couv.cylindre	Dichtung,Geh./Zylind.	
1CKC040	1	Coperchio cilindri	Cylinder cover	Couvert cylindre	Zylinderdeckel	
1CKF040	1	Filtro di aspirazione	Suction filter and gasket	Filtre d'aspiration	Sauggasfilter	
1CKM041	1	Coperchio motore	Electr.motor cover	Couver (cotè motor)	Motordeckel	
1CKP005	1	Tappo Carica olio	Screws for oil service	Bouchon pour huile	Schraube	
1CKP007	1	Tappo Scarica olio	Screws for oil service	Bouchon pour huile	Schraube	
1CKS040	1	Trafilatore di mandata compl.	Pulsation red. flange	Plaque de Silencieux	Geräuschdämpf	
1CKV040	1	Valvola ritegno olio compl.	Oil check valve compl.	Clap. Ret. Huile	Öldrucksschlagren	
1MCD956	2	Kit Biella-Pistone	Conn. rod/ piston compl.	Bielle/Piston compl.	Pleul/Kolben	
1MCE621	2	Pistone completo	Piston complete	Piston compl.	Kolben kompl.	
1MKD040	1	Disco sbattiolio	Oil centrifugal disk	Disque huile	Discheibe	
1MDQ191	4	Segmenti	Rings	Segment étanchèité	Rechteckring	
1MFD108	2	Biella	Connecting rod	Bielle	Pleul	
1MKA043	1	Albero completo	Complete Shaft	Vilebbrequin compl.	Kurbelwelle einsch.	
1PCB066	1	Piastra valvole completa	Complete valve plate	Plaque à clapets compl.	Ventilplatte kompl.	
1PGA272	1	Guarnizione P.Valvole-Carter	Valve plate-Carter gasket	Joint,Corps/Plaque a cl.	Dichtung,Geh./Ventilpl.	
1PGB321	1	Guarnizione Testa-P.Valvole	Air head-Valve plate gasket	Joint,Culasse/Plaque cl.	Dichtung, Z.kopf/Ventilpl.	
1RKA041	1	Rubinetto di aspir. D35S	Suction service valve D35S	Vanne d'aspiration D35S	Saugabsperrventil D35S.	
1RKC041	1	Rubinetto di mandata.D18S	Discharge service valve D18S	Vanne de refoul. D18S	Druckabsperrventil D18S	
1RKK042	1	Roto-statore 220/380/3/50	Stator-rotor 220/380/3/50	Stator-rotor 220/380/3/50	Stator-rotor 220/380/3/50	
1RKK050	(1)	Roto-statore 220/380/3/60	Stator-rotor 220/380/3/60	Stator-rotor 220/380/3/60	Stator-rotor 220/380/3/60	
1RKL037	(1)	Roto-statore 380/3/50 Triang.	Stator-rotor 380/3/50 DELTA	Stator-rotor 380/3/50 DELTA	Stator-rotor 380/3/50 DELTA	
1RKP040	1	Insieme passanti elettrici compl.	Electr.Terminals plate	Plaque à bornes compl.	Stromdurch.platte kompl.	
1RKR040	1	Insieme terminali elettrici compl.	Electr. blocks Kit	Passant	Durchgang	
1RKS040	1	Scatola attacchi elettrici	Complete electrical terminal box	Boite à bornes compl.	Anschl. kompl.	
2TE1130	1	Tappo	Screws	Bouchon	Schraube	
2TE1500	1	Tappo	Screws	Bouchon	Schraube	
			Accessori / Accessories / Accessoires / Zubehorteile			
1ACS380	1	Ventilatore ausiliario	Auxiliary head fan	Ventilateur Add	Zusatzlufter	
1CCM085	1	Serie completa guarnizioni	Complete gasket set	Jeu de joints	Dichtungssatz	
1CCT025	1	Testa raffreddata ad acqua	Water-cooled head	Culasse refr. par eau	Zylinderkopf ,wasserg.	
2EG2020	1	Resistenza carter 220 Volt	Cranckase heater 220Volt	Résist. du carter 220V	Olsumpfheizung 220Volt	
2EG1050	1	Resistenza carter 110 Volt	Cranckase heater 110Volt	Résist. du carter 110V	Olsumpfheizung 110Volt	
2EG1070	1	Resistenza carter 48 Volt	Cranckase heater 48Volt	Résist. du carter 48V	Olsumpfheizung 48Volt	
2EG1080	1	Resistenza carter 24 Volt	Cranckase heater 24Volt	Résist. du carter 24V	Olsumpfheizung 24Volt	
1LCN013	1	Kit iniezione di liq. D.T.C. compl.	Compl. liq. inj. device D.T.C.	Kit D.T.C. compl.	D.T.C. Bausatz	
1GCM010	1	Valvola di iniezione liquido	Solenoid valve for D.T.C. system	Disp. d'inj. D.T.C.	Magnet-Expansionv. D.T.C.	
2CE1040	1	Sonda di temperatura per D.T.C.	Temp. sensor for D.T.C.	Sonde de temp. D.T.C.	Temperat. D.T.C.	
2CE3010	1	Scheda elettronica per D.T.C.	Electronic module for D.T.C.	D.T.C. Module	D.T.C. Modul	

GARANZIE

Le OFFICINE DORIN, che impiegano esclusivamente materiali delle migliori qualità e sono attrezzate per una perfetta lavorazione, s'impegnano a sostituire o riparare gratuitamente quelle parti che durante il normale funzionamento rivelassero difetti nel materiale o nella lavorazione entro UN ANNO dalla data della fattura.
L'impegno di cui sopra è escluso ove i difetti di qualsiasi genere derivino da incidenti, manomissioni, inadeguato o cattivo uso o manutenzione.
Nessun risarcimento dei danni potrà comunque essere mai richiesto alle OFFICINE DORIN in relazione all'impegno come sopra assunto, che resta esclusivamente limitato alla sola riparazione o sostituzione di pezzi, entro un anno dalla data della fattura.
I Rappresentanti o Rivenditori non sono autorizzati ad impegnare le OFFICINE DORIN oltre i limiti dell'impegno suddetto. Le parti difettose dovranno essere consegnate franco nostra officina e saranno spedite franco destino. La bruciatura dell'avvolgimento dello statore rientra nella garanzia annuale purché la bruciatura dipenda da difetto di fabbricazione e non da difetto di alimentazione o di adeguata protezione.
Dall'impegno di cui sopra sono escluse le parti che non sono costruite dalle OFFICINE DORIN e cioè i motoventilatori, gli apparecchi di regolazione e di controllo, per i quali varranno naturalmente le specifiche garanzie offerte dalle Ditte costruttrici.

GARANTIES

L'OFFICINE MARIO DORIN, emploie exclusivement des matériaux de première qualité. L'équipement des unités de production permet un niveau de fabrication parfait.
L'OFFICINE MARIO DORIN s'engage à remplacer où à réparer gratuitement les pièces qui, au cours d'un fonctionnement normal, aurait présenté un vice de construction ou un défaut de matière; ceci pour une durée d'UN AN à partir de la date de facturation. Cette clause de garantie exclus tous défauts causés par des fausses manoeuvres, un mauvais usage, ou un entretien inadapté. De même, aucun dédommagement ne pourra être demandé à l'OFFICINE MARIO DORIN à propos de l'engagement pris ci-dessus, qui reste exclusivement limité à la réparation ou au remplacement des pièces, pendant un an à partir de la date de la facture.
Les Représentants ou revendeurs ne sont pas autorisé à engager l'OFFICINE MARIO DORIN au-delà des limites des conditions citées ci-dessus. Le pièces défectueuses devront être envoyées franco à notre usine et les pièces de remplacement seront expédiées franco à destination. La détérioration des enroulements du stator est incluse dans la garantie quand celle-ci provient d'un défaut de fabrication et non pas d'un défaut d'alimentation ou de protection non appropriée.
L'engagement ci-dessus exclut les pièces et accessoires non fabriqués par l'OFFICINE MARIO DORIN, c'est à dire, les motoventilateurs, les appareils de réglage et de contrôle. Bien entendu ces pièces peuvent faire l'objet de garanties spécifiques offertes par les fabricants.
Toute commande de matériel passé à l'OFFICINE MARIO DORIN, inclut automatiquement l'acceptation de ces clauses de garantie (sauf accord particulier).

WARRANTY

OFFICINE DORIN only use materials of the highest quality and a very high standard of workmanship in their production and will at their discretion replace or repari free of charge any parts which during normal usage prove to be faulty within 12 months from date of their invoice.
This warranty does not apply when the defect is due to: accidental damages, misuse, lack of maintenance or lack of appropriate protection.
Under no circumstances will DORIN entertain claims for consequential loss or damage-persons or property.
No third pary nor an agent is authorised to alter the terms of this warranty faulty materials are to be returned carriage paid to DORIN Florence.
Stator burn-out is included in above warranty when it is a consequence of a production defect and not a misconnection wrong voltage or misprotection.
Above commitment does not include components which are not DORIN production, such as fans, protection and control devices for which suppliers warranty only applies.

GARANTIEBEDINGUNGEN

Da die Firma DORIN ausschließlich beste Materialen bei sorgfüaltigster Verarbeitung verwendet, verpflichtet sie sich bis zu EINEM JAHR nach Rechnungsdatum für alle, bei ordentlichem Betrieb ausfallenden Teile, kostenlosen Ersatz bzw. Instandsetzung zu leisten.
Diese Garantieverpflichtung erlischt bei Schäden die durch mangelhafte Installation, Bedienung und/oder Betrieb, sowie durch Unfälle verursacht werden. Folgeschäden . und Nebenkosten werden von der Firm DORIN keinesfalls ersetzt. Die Garantie ist eine reine einjährige Materialgarantie wie oben beschrieben. Händler und Vertretungen sind zu keinen weiteren Zusagen über diese Materialgarantie der Firma DORIN hinaus, autorisiert.
Die fehlerhaften Teile sind frachtfrei dem Werk zuzusenden und frachtfrei werden die Austauschteile an den Bestimmungsort zurückgesandt.
Durchgebrannte Statorwicklungen sind in der einjährigen Garantie eingeschlossen, wenn sie durch Fabrikationsmangel ausgefallen sind und nicht durch mangelhaften Motorschutz bzw. falsche Netzspannung.
Von obiger Verpflichtung sind alle nicht von der Firma DORIN hergestellten Teile ausgeschlossen (Vent. Motoren, Stell-und Kontrollgeräte), die auf Kundenwunsch beigestellt wurden. Für diese Teile gelten die Garantiebendingungen der jeweiligen Hersteller.

DEMO

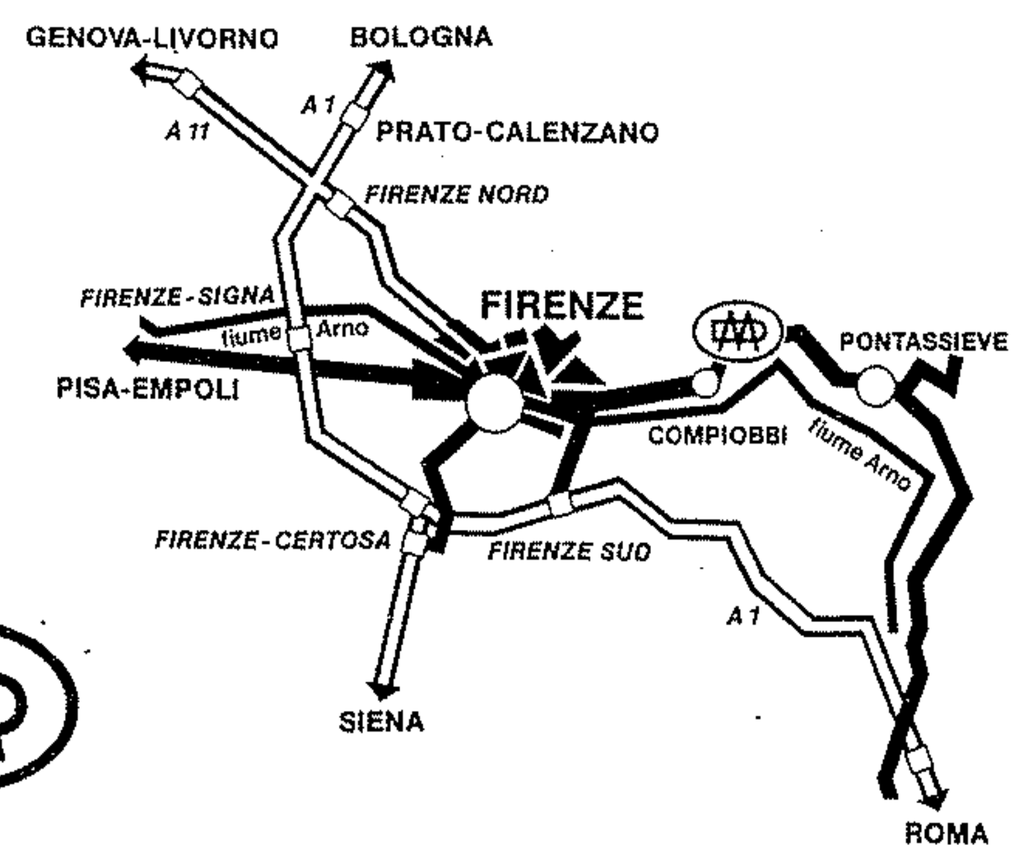

OFFICINE MARIO DORIN
via aretina, 388
50061 COMPIOBBI FIRENZE
ITALIA

Téléphone: +39/055/623211
Fax: +39/055/62621380
INTERNET: http://www.dorin.com
E-mail: dorin@dorin.com